FARMERS & MERCHANTS REISTERSTOWN

25 WESTMINSTER PIKE
REISTERSTOWN, MD 21136

PARTIAL CHANGE OF OCCUPANCY / USE, ALTERATION LEVEL 2 / MODIFICATION, ALTERATION LEVEL 1 / RENOVATION
PERMIT SET: 29 SEPTEMBER 2026

ABBREVIATIONS

@	AT
ACM	ALUMINUM COMPOSITE MATERIAL
ADJ	ADJACENT
AED	AUTOMATED EXTERNAL DEFIBRILLATOR
AFF	ABOVE FINISHED FLOOR
AHJ	AUTHORITY HAVING JURISDICTION
AHU	AIR HANDLING UNIT
ANOD	ANODIZED
ALUM	ALUMINUM
APC	ACOUSTICAL PANEL CEILING
BD	BOARD
BGE	BALTIMORE GAS & ELECTRIC
BLDG	BUILDING
BIT	BITUMINOUS
BLK	BLOCK
BM	BEAM
BO, BOT	BOTTOM OF
BOD	BASIS OF DESIGN
BR	BRICK
BUR	BUILT-UP ROOF
C	COURSES
CAB	CABINET
CB	CHALKBOARD
℄	CENTERLINE, COLUMN LINE
CLG	CEILING
CJ	CONTROL JOINT
CMU	CONCRETE MASONRY UNIT
COL	COLUMN
CONC	CONCRETE
CONST	CONSTRUCTION
CONT	CONTINUOUS
CPT	CARPET
CT	CERAMIC TILE
DIA, Ø	DIAMETER
DISP	DISPENSER
DIM	DIMENSION
DN	DOWN
DS	DOWNSPOUT
DTL(S)	DETAIL(S)
DWG	DRAWING
DW	DISHWASHER
EF	EXHAUST FAN
EIFS	EXTERIOR INSULATION FINISH SYSTEM
EJ	EXPANSION JOINT
ELEC	ELECTRICAL
ELEV	ELEVATOR
EL	ELEVATION
EO	EDGE OF
EPDM	ETHYLENE PROPYLENE DIENE MONOMER
EPS	EXPANDED POLYSTYRENE
EQ	EQUAL
EQUIP	EQUIPMENT
EWC	ELECTRIC WATER COOLER
EWH	ELECTRIC WATER HEATER
EX, EXIST	EXISTING
EXP JT, EJ	EXPANSION JOINT
EXT, EXTR	EXTERIOR
FAAP	FIRE ALARM ANNUCIATOR PANEL
FD	FLOOR DRAIN
FDC	FIRE DEPARTMENT CONNECTION
FE	FIRE EXTINGUISHER
FEC	FIRE EXTINGUISHER CABINET
FHC	FIRE HOSE CABINET
FIN	FINISHED, FINISH
FLASH, FLG	FLASHING
FL, FLR	FLOOR
FO	FACE OF
FOS	FACE OF STUD
FP	FIRE PROOFING
FR, FRT	FIRE RETARDENT TREATED
FRP	FIBERGLASS REINFORCED PLASTIC
FT	FOOT, FEET
FTG	FOOTING
GA	GAUGE
GALV	GALVANIZED
GB	GYPSUM BOARD
GWB	GYPSUM WALL BOARD
GENL	GENERAL
HM	HOLLOW METAL
HB	HOSE BIBB
HC	HANDICAPPED
HCWD	HOLLOW-CORE WOOD
HDPE	HIGH-DENSITY POLYETHYLENE
HO	HOLD OPEN
HORIZ	HORIZONTAL
HP	HIGH POINT
HR	HANDRAIL, HOUR
HSS	HOLLOW STRUCTURAL SECTION
HT	HEIGHT
ID	INSIDE DIAMETER
INSUL	INSULATION
INT, INTR	INTERIOR
ISO	POLYISOCYANURATE
JO	JAMB OPENING
JT	JOINT
KD	KNOCK DOWN
LF	LINEAR FEET
LAM	LAMINATE
LAV	LAVATORY
LED	LIGHT-EMITTING DIODE
LEED	LEADERSHIP IN ENERGY AND ENVIRONMENTAL DESIGN
LLH	LONG LEG HORIZONTAL
LLV	LONG LEG VERTICAL
LOD	LEASE OUTLINE DRAWING LEVEL OF DISCHARGE LIMIT OF DISTURBANCE
LP	LOW POINT
LVL	LEVEL
LVL	LAMINATED VENEER LUMBER
MACH	MACHINE
MANUF, MFR	MANUFACTURER
MAS	MASONRY
MATL	MATERIAL
MAX	MAXIMUM
MB	MARKERBOARD
MDF	MEDIUM DENSITY FIBERBOARD
MECH	MECHANICAL
MIN	MINIMUM
MISC	MISCELLANEOUS
MO	MASONRY OPENING
MTG	MOUNTING
MTL	METAL
MULL	MULLION
NIC	NOT IN CONTRACT
NO, #	NUMBER
NOM	NOMINAL
NRC	NOISE REDUCTION COEFFICIENT
NTS	NOT TO SCALE
OC, O/C	ON CENTER
OCC	OCCUPANT
OD	OUTSIDE DIAMETER
OH, OP HD	OPPOSITE HAND
OPER	OPERABLE
OPG	OPENING
OPP	OPPOSITE
PAF	POWER-ACTUATED FASTENER
PART	PARTITION
PDF	PORTABLE DOCUMENT FORMAT
PTD	PAINTED
PTN	PARTITION
PERIM	PERIMETER
PL, ℙ	PLATE
PROP	PROPERTY LINE
PLAM	PLASTIC LAMINATE
PLY, PLYWD	PLYWOOD
POLY	POLYETHYLENE
PREFAB	PREFABRICATED
PREP	PREPARATION
PT	PAINT
PUR	POLYURETHANE
PVC	POLYVINYL CHLORIDE
QT	QUARRY TILE
R	RISER
RA	RETURN AIR
RAD	RADIUS
RCP	REFLECTED CEILING PLAN
RD	ROOF DRAIN
REF	REFERENCE
REFRIG	REFRIGERATOR
REINF	REINFORCING
REQD	REQUIRED
REQT(S)	REQUIRMENT(S)
RL	RAIN LEADER
RM	ROOM
RO	ROUGH OPENING
RTU	ROOF TOP UNIT
Rx, RX	REMOVE
SA	SUPPLY AIR
SAN	SANITARY
SCHED	SCHEDULE
SCWD	SOLID-CORE WOOD
SECT	SECTION
SHGC	SOLAR HEAT-GAIN COEFFICIENT
SHT	SHEET
SIM	SIMILAR
SP	STANDPIPE
SPECS	SPECIFICATIONS
SQ	SQUARE
S/S	STAINLESS STEEL
STC	SOUND TRANSMISSION CLASS
STL	STEEL
STRUCT	STRUCTURAL
SURR	SURROUNDED
SUSP	SUSPENDED
SW	STORM WATER
SWM	STORM WATER MANAGEMENT
T	TREAD
T&G	TONGUE & GROVE
TB	TACKBOARD
TBD	TO BE DETERMINED
TD	TRENCH DRAIN
TEL	TELEPHONE
TH	THRESHOLD
TO	TOP OF
TPO	THERMOPLASTIC POLYOLEFIN
TRTD	PRESSURE TREATED
TYP	TYPICAL
UL	UNDERWRITERS LABORATORIES
UNO	UNLESS NOTED OTHERWISE
UON	UNLESS OTHERWISE NOTED
VAT	VINYL ASBESTOS TILE
VB	VAPOR BARRIER
VCT	VINYL COMPOSITION TILE
VERT	VERTICAL
VIF	VERIFY IN FIELD
WB	WHITEBOARD
WD	WOOD
WH	WALL HYDRANT
W/	WITH
W/O	WITHOUT
WP	WATERPROOFING
WWF	WELDED WIRE FABRIC
WWM	WELDED WIRE MESH
XPS	EXTRUDED POLYSTYRENE

SYMBOLS

- A — FACE-OF-CONSTRUCTION LINE
- 1 — COLUMN LINE
- BUILDING SECTION MARKER: A9 / A301 — SECTION IDENTIFICATION; SHEET WHERE SECTION APPEARS; CUTS CONSTRUCTION
- ELEVATION MARKER: A3 / A201 — ELEVATION IDENTIFICATION; SHEET WHERE ELEVATION APPEARS
- INTERIOR ELEVATION MARKER: 1 / A5 / A701 / 3 — DRAWING LOCATION; SHEET WHERE ELEVATION APPEARS; ELEVATION IDENTIFICATION
- DETAIL MARKER — ISOLATES DETAIL
- A3 / A401 — DETAIL IDENTIFICATION; SHEET WHERE DETAIL APPEARS
- 1 — SCHEDULED ITEM MARKER
- HEIGHT / ELEVATION MARKER
- X — KEYNOTE MARKER
- ROOM MARKER: LOBBY / 101 — ROOM NAME; ROOM NUMBER
- 101A — DOOR MARKER: DOOR NUMBER / OPENING MARK
- 1 — WINDOW/STOREFRONT/ LOUVER MARKER
- A2 — PARTITION MARKER: PARTITION TYPE
- REVISION MARKER — ISOLATES AREA OF REVISION; 1 — REVISION IDENTIFICATION

DRAWINGS SCHEDULE

GENERAL
G001 TITLE SHEET
G002 LIFE SAFETY PLAN & CODE ANALYSIS

ARCHITECTURAL
AD101 DEMOLITION FLOOR PLANS
AD111 DEMOLITION RCP's
A101 RENOVATION FLOOR PLANS
A111 RENOVATION RCP's
A131 FURN., FINISH, & EQUIP. PLANS
A601 SCHEDULES AND DETAILS
A701 ENLARGED PLANS & MILLWORK DETAILS
A702 MILLWORK DETAILS
A801 ARCHITECTURAL SPECIFICATIONS

MECHANICAL
M-1 GENERAL NOTES AND LEGENDS
M-2 EXISTING AND DEMO FLOOR PLANS
M-3 EXISTING AND DEMO FLOOR PLANS
M-4 NEW WORK FLOOR AND PART PLANS
M-5 NEW WORK FLOOR AND PART PLANS
M-6 PLUMBING RISER DIAGRAMS
M-7 MECHANICAL SCHEDULES
M-8 MECHANICAL DETAILS
M-9 MECHANICAL SPECIFICATIONS

ELECTRICAL
E-1 NOTES AND SYMBOLS
E-2 DEMO BASEMENT & FIRST FLOOR - LIGHTING & POWER PLANS
E-3 DEMO SECOND FLOOR - LIGHTING & POWER PLANS
E-4 BASEMENT, FIRST, SECOND FLOOR - LIGHTING PLANS
E-5 BASEMENT & SECOND FLOOR - POWER PLANS
E-6 RISER DIAGRAM & PANEL SCHEDULES
E-7 ELECTRICAL SPECIFICATIONS & COMCHECK

PROPERTY INFORMATION

OWNER NAME:	FARMERS & MERCHANTS BANK	GRID:	0010
MAILING ADDRESS:	15226 HANOVER PIKE UPPERCO, MD 21155	PARCEL:	0112
PROPERTY ADDRESS:	25 WESTMINSTER PIKE REISTERSTOWN, MD 21136	LOT:	2
		PLAT:	0069 / 0061
AUTHORITY HAVING JURISDICTION:	BALTIMORE COUNTY	ZONING	BM-BL
		LOT SIZE:	1.13 ACRES
ACCOUNT NUMBER:	2200025789	USE:	06
ELECTION DISTRICT:	04TH		
TAX MAP:	0048		

VICINITY MAP

PROJECT BUILDING

DESIGN TEAM

Architect — SANDERS DESIGNS, P.A.
9727 GREENSIDE DRIVE, SUITE 202
COCKEYSVILLE, MARYLAND 21030-5080
T: 410-560-2624 F: 410-560-2722

MEP Engineer — JLR DESIGN CONSULTANTS, INC.
1901 NORTH FOUNTAIN GREEN ROAD
BEL AIR, MARYLAND 21015-1411
T: 410-893-2822 F: 410-803-0442

APPLICABLE CODES

- MARYLAND ACCESSIBILITY CODE COMAR 09.12.53 (ADAAG 2010)*
- NATIONAL ELECTRICAL CODE 2024*
- INTERNATIONAL BUILDING CODE 2021*
- MARYLAND BUILDING REHABILITATION CODE COMAR 09.12.58 (IEBC 2015)*
- NATIONAL FIRE PROTECTION ASSOCIATION 101 2018
- NATIONAL FIRE PROTECTION ASSOCIATION 1 2018
- INTERNATIONAL MECHANICAL CODE 2021*
- INTERNATIONAL ENERGY CONSERVATION CODE 2021*
- INTERNATIONAL PLUMBING CODE 2021*
- INTERNATIONAL FUEL GAS CODE 2021*
- THE LIQUEFIED PETROLEUM GAS CODE (NFPA 54) 2020*

  * WITH LOCAL AMENDMENTS

DESCRIPTION OR WORK

THE ENTIRE BASEMENT WILL BE MODIFIED WITH A PARTIAL CHANGE OF OCCUPANCY TO PROVIDE SMALL ASSEMBLY BUSINESS AND BUSINESS OCCUPANCIES, INCLUDING RESTROOMS, IN A PREVIOUSLY STORAGE OCCUPANCY. THE FIRST FLOOR RESTROOMS WILL BE RENOVATED TO IMPROVE ACCESSIBILITY. THE SECOND FLOOR WILL BE RENOVATED WITH PARTIAL MODIFICATIONS AND A PARTIAL CHANGE OF USE TO PROVIDE NEW OPEN AND ENCLOSED OFFICE SPACES IN EXISTING BUSINESS OCCUPANCY SPACES. EXISTING EGRESS / EXITS WILL REMAIN UNCHAGED. NO WORK ON THE BUILDING EXTERIOR OR SHELL WILL OCCUR.

LOCATION MAP

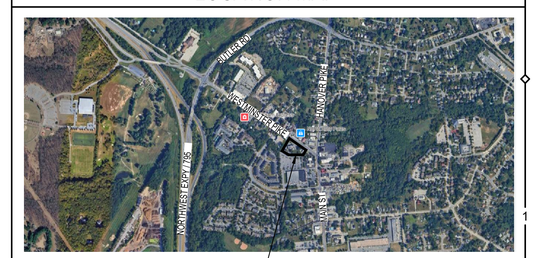

PROJECT SITE

TRUE NORTH

FARMERS & MERCHANTS BANK
25 WESTMINSTER PIKE
REISTERTOWN, MARYLAND, 21136
INTERIOR ALTERATION

ARCHITECTURAL REGISTRATION BOARD — 8586 — TIMOTHY H. SANDERS — STATE OF MARYLAND

I CERTIFY THAT THESE DOCUMENTS WERE PREPARED OR APPROVED BY ME AND THAT I AM A DULY LICENSED ARCHITECT UNDER THE LAWS OF THE STATE OF MARYLAND.

LICENSE NO.: 8586

EXP. DATE: 21 MAY 2027

THESE DRAWINGS ARE NOT PERMITTED TO BE COPIED OR REPRODUCED, EITHER WHOLLY OR PARTIALLY, UNLESS WRITTEN PERMISSION IS FIRST OBTAINED FROM SANDERS DESIGNS, P.A.

SANDERS | DESIGNS
ARCHITECTS PLANNERS
WWW.SANDERSDESIGNS.COM
MAILBOX@SANDERSDESIGNS.COM
T: (410) 560 2624
9727 GREENSIDE DRIVE, SUITE 202, COCKEYSVILLE, MARYLAND 21030

No.	Date	Revision

Project No.: 26.102
Date: 29 SEPTEMBER 2026
Scale: NONE
Edition: PERMIT SET
Drawing Name: TITLE SHEET
Drawing Number: G001

1. THE FOLLOWING GENERAL NOTES APPLY TO ALL ARCHITECTURAL DRAWINGS.
2. GENERAL CONTRACTOR: UNLESS NOTED OTHERWISE, ALL DIRECTIVES AND INSTRUCTIONS IN THESE DRAWINGS ARE TO THE GENERAL CONTRACTOR.
3. DRAWINGS: ARE INTENDED TO GRAPHICALLY ILLUSTRATE THE OVERALL NATURE OF THE WORK, THE CONFIGURATION, ARRANGEMENT, AND LOCATION OF THE WORK AND IT'S PARTS, AND THE PHYSICAL DIMENSIONS OF THE WORK.
4. FIELD CONDITIONS: CONDUCT AN INDEPENDENT SURVEY OF THE PROPOSED WORK AREA AND VERIFY ALL EXISTING FIELD CONDITIONS (DETAILS & DIMENSIONS). IF CONDITIONS VARY FROM INFORMATION PROVIDED ON THIS DRAWING, CONTRACTOR SHOULD IMMEDIATELY NOTIFY ARCHITECT IN WRITING AND WAIT FOR DIRECTION BEFORE PROCEEDING FURTHER WITH THE WORK. INFORMATION SHOWN ON THIS DRAWING IS OBTAINED FROM RECORD DRAWINGS AND FIELD SURVEY AND IS INTENDED FOR REFERENCE ONLY.
5. DIMENSIONS: ALL DIMENSIONS SHOWN IN THESE DRAWINGS FOR THE WORK ARE TO BE CONFIRMED IN FIELD BY CONTRACTOR AND ANY DISCREPANCIES SHOULD BE IMMEDIATELY NOTIFIED TO THE ARCHITECT BEFORE PROCEEDING FURTHER.
6. SET OF DRAWINGS: THE ARCHITECTURAL DRAWINGS ARE A PART OF A LARGER SET OF DRAWINGS WHICH, WHEN COMPLETE, CONSISTS OF ALL DRAWINGS LISTED IN THE DRAWINGS SCHEDULE. THE WORK DESCRIBED BY THE DRAWINGS OF ANY ONE DISCIPLINE MAY AFFECT THE WORK DESCRIBED ON DRAWINGS OF ANOTHER DISCIPLINE, THUS REQUIRING COORDINATION BETWEEN THE DRAWINGS OF THESE DISCIPLINES. PARTIAL SETS OF DRAWINGS ARE INCOMPLETE AND SHOULD NOT BE DISTRIBUTED OR UTILIZED BY THE CONTRACTOR. IT IS THE CONTRACTOR'S RESPONSIBILITY TO REVIEW AND COORDINATE THE WORK OF ALL SUB-CONTRACTORS, TRADES, VENDORS AND SUPPLIERS WITH ALL REQUIREMENTS OF THE CONTRACT DOCUMENTS BEFORE COMMENCING CONSTRUCTION AND TO ASSURE THAT ALL PARTIES ARE AWARE OF ALL REQUIREMENTS, REGARDLESS OF WHERE THE REQUIREMENTS OCCUR IN THE CONTRACT DOCUMENTS, WHICH MIGHT AFFECT THE WORK OF THAT PARTY.
7. COORDINATION: COORDINATE ALL NEW WORK AMONG THE DRAWINGS OF ALL DISCIPLINES REPRESENTED IN THE CONTRACT DOCUMENTS.
8. GRADE LINES: THOSE SHOWN ON THE BUILDING ELEVATIONS AND/OR SECTIONS ARE APPROXIMATE. THEY ARE AT THE BUILDING FACE OR THE SECTION END UNLESS NOTED OTHERWISE.
9. DIMENSIONING: UNLESS OTHERWISE INDICATED, PLAN DIMENSIONS ARE TO COLUMN GRID CENTERLINES, NOMINAL SURFACE OF MASONRY, FACE OF WALL/PARTITION FINISH, AND FACE OF CONCRETE WALLS.
10. "FLOOR LINE": REFERS TO TOP OF CONCRETE SLABS / TOP OF SUB-FLOORING. FINISH FLOORING IS INSTALLED ABOVE THE FLOOR LINE. FOR DEPRESSED FLOORS AND CURBS, SEE STRUCTURAL DRAWINGS.
11. DOORS AT CORNERS: WHERE LOCATED NEAR A CORNER OF A ROOM AND NOT LOCATED BY DIMENSION, THE ROUGH OPENING SHALL BE LOCATED THUS - 4 INCHES FROM FINISH FACE IN A STUD-PARTITION, 6 INCHES FROM FACE IN A CONCRETE WALL , AND 8 INCHES FROM FACE IN A CMU WALL.
12. ACOUSTICAL WALLS / PARTITIONS: WHERE SOUND- ATTENUATION BLANKETS ARE INSTALLED, SEAL DOOR FRAMES, GLAZED OPENING FRAMES, INTERSECTIONS, AND OTHER PENETRATIONS WITH ACOUSTICAL SEALANT.
13. ROUGH-IN DIMENSIONS: VERIFY ALL FOR EQUIPMENT PROVIDED IN THIS CONTRACT, OR BY OTHERS. UNLESS NOTED OTHERWISE, ALL MATERIALS AND EQUIPMENT TO BE INSTALLED PER THE APPLICABLE PROVISIONS OF THESE DOCUMENTS AND THE MANUFACTURER'S INSTALLATION INSTRUCTIONS.
14. CEILING HEIGHT DIMENSIONS: ARE TO FINISHED SURFACES, UNLESS NOTED OTHERWISE.
15. CUTTING AMONG TRADES: CUTTING INTO NEW WORK OF OTHER TRADES SHALL BE DONE BY THE TRADE REQUIRING THE CUTTING. ALL CUTTING SHALL BE DONE IN A NEAT MANNER USING SAWS WHERE POSSIBLE. ALL PATCHING AND PAINTING REQUIRED AS A RESULT OF THIS CUTTING SHALL BE THE RESPONSIBILITY OF THE CONTRACTOR. PROVIDE ADEQUATE TEMPORARY SUPPORT FOR WORK BEING CUT AND PATCHED TO PREVENT FAILURE. PROVIDE ADEQUATE PROTECTION OF OTHER WORK DURING CUTTING AND PATCHING TO PREVENT DAMAGE.
16. FINISHES: PROPERLY PREPARE ALL SURFACES FOR NEW FINISHES. PATCH WITH SEAMS WHICH ARE DURABLE AND AS INVISIBLE AS POSSIBLE. COMPLY WITH SPECIFIC TOLERANCES FOR THE TYPE OF WORK BEING DONE.
17. FIRE-STOPPING: ALL PENETRATIONS OF FIRE-RESISTANT RATED ASSEMBLIES SHALL BE SEALED WITH PROPER AND APPROVED THROUGH-PENETRATION FIRE-STOP SYSTEM AS RECOGNIZED BY, AND LISTED WITH, ACCEPTED NATIONAL TESTING LABORATORIES.
18. DEVIATION: OBTAIN ARCHITECT'S SPECIFIC APPROVAL PRIOR TO DEVIATING FROM THE CONTRACT DOCUMENTS. THE ARCHITECT'S RESPONSIBILITY IS LIMITED TO THE ITEMS SHOWN ON THE ARCHITECTURAL DRAWINGS. IT SHALL BE THE CONTRACTOR'S SOLE RESPONSIBILITY TO COMPLY WITH STANDARD BUILDING AND CONSTRUCTION PRACTICES AND MANUFACTURER'S RECOMMENDATIONS FOR ALL ITEMS NOT SPECIFICALLY INDICATED AND DETAILED ON THE DRAWINGS. FOLLOW THE BEST TRADE PRACTICES AND ENGINEERING FOR THE ITEMS NOT SPECIFICALLY DETAILED AND INDICATED.
19. GOVERNMENTAL REQUIREMENTS: ALL PARTS OF THE WORK, INCLUDING MATERIALS, METHODS, ASSEMBLIES, ETC., MUST COMPLY WITH THE MINIMUM REQUIREMENTS OF THE GOVERNING REGULATIONS OF ALL FEDERAL, STATE, DISTRICT, AND LOCAL AUTHORITIES HAVING JURISDICTION OVER THE PROJECT AS WELL AS THOSE GREATER REQUIREMENTS INDICATED BY THE CONTRACT DOCUMENTS. NO PART OF THE CONTRACT DOCUMENTS MAY BE CONSTRUED TO REQUIRE OR PERMIT WORK CONTRARY TO A GOVERNING REGULATION.

GENERAL NOTES | A6

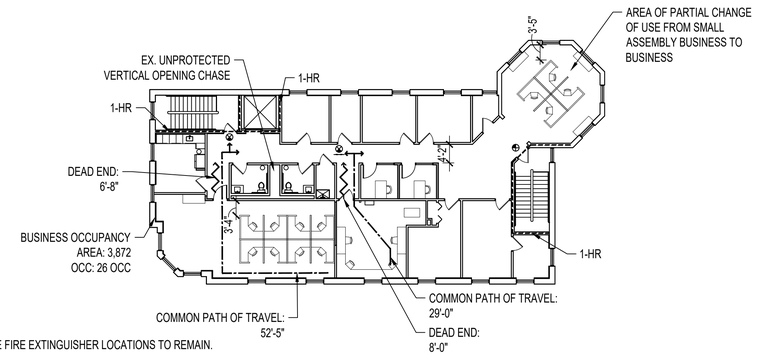

EX. PORTABLE FIRE EXTINGUISHER LOCATIONS TO REMAIN.

SCALE: 1/16" = 1'-0" 0 4' 8' 16' 32'

LIFE SAFETY PLAN - SECOND FLOOR | C4

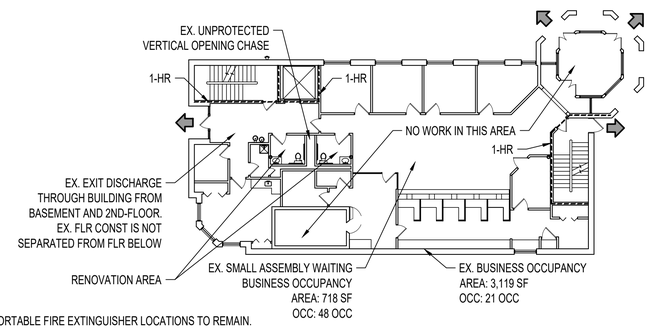

EX. PORTABLE FIRE EXTINGUISHER LOCATIONS TO REMAIN.

SCALE: 1/16" = 1'-0" 0 4' 8' 16' 32'

LIFE SAFETY PLAN - FIRST FLOOR | C2

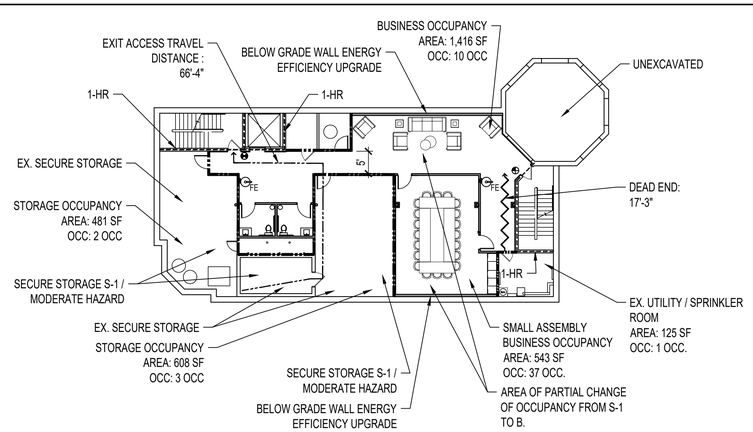

SCALE: 1/16" = 1'-0" 0 4' 8' 16' 32'

LIFE SAFETY PLAN - BASEMENT | C1

EXIT ACCESS TRAVEL DISTANCE
COMMON PATH OF TRAVEL
DEAD END
EXIT DISCHARGE
EXIT SIGNS
FIRE EXTINGUISHER
FIRE BARRIER (RATING AS NOTED)
SMOKE PARTITION

LEGEND: LIFE SAFETY PLAN | F1

OCCUPANT LOAD (EXISTING):

BASEMENT STORY

USE GROUP	AREA (SF)	AREA /OCC	OCCLOAD
STORAGE:	3,453	300	12
TOTAL:	3,453		12

FIRST STORY

USE GROUP	AREA (SF)	AREA /OCC	OCCLOAD
SMALL ASSEMBLY			
BUSINESS (WAITING):	718	15	48
BUSINESS:	3,119	150	21
TOTAL:	3,837		69

SECOND STORY

USE GROUP	AREA (SF)	AREA /OCC	OCCLOAD
SMALL ASSEMBLY			
BUSINESS:	401	15	27
BUSINESS:	3,471	150	24
TOTAL:	3,872		51

EXISTING **TOTAL:** **11,162** **132**

OCCUPANT LOAD (PROPOSED):

BASEMENT STORY

USE GROUP	AREA (SF)	AREA /OCC	OCCLOAD
SMALL ASSEMBLY			
BUSINESS:	543	15	37
BUSINESS:	1,821	150	13
STORAGE:	1,089	300	4
TOTAL:	3,453		54

FIRST STORY

USE GROUP	AREA (SF)	AREA /OCC	OCCLOAD
SMALL ASSEMBLY			
BUSINESS (WAITING):	718	15	48
BUSINESS:	3,119	150	21
TOTAL:	3,837		69

SECOND STORY

USE GROUP	AREA (SF)	AREA /OCC	OCCLOAD
BUSINESS:	3,872	150	26
TOTAL:	3,872		26

PROPOSED TOTAL: **11,162** **149**

OCCUPANT LOAD | B3

OCCUPANT LOAD: 149
OCCUPANT LOAD PER GENDER: 75

FIXTURE COUNT PER GENER

FIXTURE TYPE	REQUIRED	PROVIDED
TOILETS		
MEN	3	3
WOMEN	3	3
LAVATORIES		
MEN	2	3
WOMEN	2	3
DRINKING FOUNTAINS	2	2
UTILITY SINKS	1	1

PLUMBING FIXTURES | B2

ALTERATIONS:
NEW CONSTRUCTION IN ALTERATIONS SHALL CONFORM TO CODE REQUIREMENTS FOR NEW CONSTRUCTION

CHANGE OF OCCUPANCY OR USE:
SPACES UNDERGOING A CHANGE IN OCCUPANCY THAT WOULD RESULT IN INCREASED ELECTRICAL ENERGY DEMAND SHALL CONFORM TO CODE REQUIREMENTS FOR NEW CONSTRUCTION.

AFFECTED BUILDING ENVELOPE

ELEMENT	REQ. VALUE	PROV. VALUE
BELOW GRADE WALLS:	C-0.119	C-0.091

WALL CONSTRUCTION:
CMU BLOCK R-1.0
1" EPS TYPE II R-4.0
MTL STD @ 16" O.C
W/ R-13 BATTS ADJUSTED R-5.98

ENERGY EFFICIENCY | B1

CLASSIFICATION OF WORK	PARTIAL CHANGE OF USE OR OCCUPANCY INTERIOR ALTERATIONS (LEVEL 2) / MODIFICATIONS INTERIOR ALTERATIONS (LEVEL 1) / RENOVATION
FIRE PROTECTION	BUILDING *IS PROTECTED* BY AN AUTOMATIC *SPRINKLER* SYSTEM IN COMPLIANCE WITH IBC 2018 SECTION 903.3.1.1
CONSTRUCTION TYPE (EXISTING)	TYPE II-B / TYPE II (0,0,0)
EXISTING OCCUPANCY TYPE	B - BUSINESS, S-1 STORAGE, NON-SEPARATED
PROPOSED OCCUPANCY TYPE	B - BUSINESS, S-1 STORAGE, NON-SEPARATED
BUILDING HEIGHT (EXISTING)	24 FEET
NUMBER OF STORIES (EXISTING)	2-STORIES
LARGEST FLOOR AREA (EXISTING)	4,225 SF
TOTAL INTERIOR BUILDING AREA (EXIST)	BASEMENT: 3,453 SF FIRST FLOOR: 3,837 SF SECOND FLOOR: 3,872 SF TOTAL: 11,162 SF
TOTAL CHANGE OF OCUPANCY / USE AREA	BASEMENT: 2,323SF FIRST FLOOR: 0 SF SECOND FLOOR: 401 SF TOTAL: 1,969 SF
TOTAL ALTERATION LEVEL 2 / MODIFICATION WORK AREA	BASEMENT: 3,047SF FIRST FLOOR: 0 SF SECOND FLOOR: 2,052 SF TOTAL: 5,099 SF
TOTAL ALTERATION LEVEL 1 / RENOVATION AREA	BASEMENT: 0 SF FIRST FLOOR: 50 SF SECOND FLOOR: 1,414 SF TOTAL: 1,464 SF
OCCUPANT LOAD (EXISTING)	132
OCCUPANT LOAD (PROPOSED)	149
NUMBER OF EXITS PER STORY	2 PER STORY
COMMON PATH OF TRAVEL	100 FEET
EXIT ACCESS TRAVEL DISTANCE	300 FEET
DEAD END CORRIDORS	50 FEET
PORTABLE FIRE EXTINGUISHERS	75 FEET MAX TRAVEL DISTANCE TO EXTINGUISHER
EXIT SIGNS	ILLUMINATED AND TACTILE SIGNS ARE EXISTING TO REMAIN UNO
EMERGENCY LIGHTING	AS INDICATED ON THE DRAWINGS
FIRE ALARM SYSTEM	NOT REQUIRED. EXISTING TO REMAIN AND BE MODIFIED FOR THE NEW LAYOUT
CORRIDOR WIDTH	36 AND 44 INCHES
CORRIDOR FIRE SEPARATION RATING	NOT REQUIRED. BUILDING IS PROTECTED BY AUTOMATIC SPRINKLER SYSTEM.
PROTECTION FROM HAZARDS	PROTECTION OF THE BUSINESS OCCUPANCY FROM ASSOCIATED GENERAL STORAGE AREAS IS PROVIDED VIA AUTOMATIC SPRINKLER SYSTEM AND SMOKE PARTITIONS.
PROTECTION OF VERT OPENINGS	UNPROTECTED VERTICAL OPENINGS ARE ALLOWED WHERE PROTECTED BY AUTOMATIC SPRINKLER AND REQUIRED EXITS ARE CODE COMPLIANT.
STAIRWAY WIDTH	44 INCHES
EXIT DISCHARGE	50% OF EXITS ARE PERMITTED TO DISCHARGE THROUGH THE BUILDING. THE LEVEL OF EXIT DISCHARGE IS PROTECTED BY A SPRINKLER SYSTEM THROUGHOUT, INCLUDING THE AREA OF EXIT DISCHARGE. THE AREA OF EXIT DISCHARGE IS NOT SEPARATED FROM THE FLOOR BELOW.
IEBC CHANGE OF OCCUPANCY / USE HAZARD CATEGORY COMPARISON: STORAGE TO BUSINESS	MEANS OF EGRESS : NO CHANGE HEIGHTS & AREAS : LOWER (3 TO 4) EXTERIOR WALLS EXPOSURE: LOWER (2 TO 3)
ACCESSIBILITY	EXISTING BUILDING IS ACCESSIBLE FROM SITE ACCESS POINTS TO ALL FLOORS. NO WORK WILL AFFECT AN AREA OF PRIMARY FUNCTION. THE EXISTING LEVEL OF ACCESSIBILITY WILL BE MAINTAINED THROUGHOUT THE BUILDING
ACCESSIBLE MEANS OF EGRESS	ACCESSIBLE MEANS OF EGRESS ARE NOT REQUIRED TO BE ADDED TO EXISTING BUILDINGS FOR ALTERATIONS AND CHANGES OF OCCUPANCY
PLUMBING FIXTURES	SEE PLUMBING FIXTURE COUNT BASED ON PROPOSED OCCUPANT LOAD. RESTROOM FIXTURES DISTRIBUTED THROUGHOUT ALL FLOORS. ACCESS TO DRINKING FOUNTAINS IS WITHIN ONE STORY AND 500 FEET, AND WATER DISPENSERS ARE PROVIDED.

CODE ANALYSIS TABLE | A1

FARMERS & MERCHANTS BANK
25 WESTMINSTER PIKE
REISTERTOWN, MARYLAND, 21136
INTERIOR ALTERATION

ARCHITECTURAL REGISTRATION BOARD 8586 TIMOTHY H. SANDERS STATE OF MARYLAND

I CERTIFY THAT THESE DOCUMENTS WERE PREPARED OR APPROVED BY ME AND THAT I AM A DULY LICENSED ARCHITECT UNDER THE LAWS OF THE STATE OF MARYLAND.

LICENSE NO.: 8586
EXP. DATE: 21 MAY 2027

THESE DRAWINGS ARE NOT PERMITTED TO BE COPIED OR REPRODUCED, EITHER WHOLLY OR PARTIALLY, UNLESS WRITTEN PERMISSION IS FIRST OBTAINED FROM SANDERS DESIGNS, P.A.

SANDERS | DESIGNS
ARCHITECTS PLANNERS
WWW.SANDERSDESIGNS.COM
MAILBOX@SANDERSDESIGNS.COM
T: (410) 560 2624
9727 GREENSIDE DRIVE, SUITE 202, COCKEYSVILLE, MARYLAND 21030

No.	Date	Revision

Project No.: 26.102
Date: 29 SEPTEMBER 2026
Scale: 1/8" = 1'-0"
Edition: PERMIT SET
Drawing Name: LIFE SAFETY PLAN & CODE ANALYSIS
Drawing Number: G002

DEMOLITION GENERAL NOTES:

G01. OWNER WILL OCCUPY PORTIONS OF BUILDING. CONDUCT WORK TO AVOID DISRUPTING OPERATIONS.

G02. MAINTAIN ALL WARRANTIES FOR SYSTEMS AND ASSEMBLIES AFFECTED BY THE WORK. REMOVE, REPLACE, PATCH AND REPAIR MATERIALS CUT OR DAMAGED. COORDINATE W/ MFRS.

G03. SURVEY EXISTING CONDITIONS AND RECORD FINDINGS VIA NOTES AND PHOTOS.

G04. PROVIDE TEMPORARY DUST CONTROL MEASURES USING 10 MIL POLYETHYLENE SHEETS AND DUST-CONTROL ADHESIVE WALK-OFF MATS. COMPLY WITH ASTM E84.

G05. MAINTAIN ACCESS TO ALL STAIRS, ELEVATORS, AND EXITS FROM OCCUPIED PORTIONS OF THE BUILDING.

G06. MAINTAIN FUNCTIONALITY AND CODE COMPLIANCE OF ALL FIRE SUPPRESSION AND FIRE ALARM SYSTEMS ACTIVE IN THE BUILDING. SCHEDULE ALL REQUIRED SHUT-DOWNS WITH THE OWNER AND LIMIT THEM TO THE SHORTEST TIME FRAMES POSSIBLE.

G07. PROTECT ALL SYSTEMS AND FINISHES NOT SCHEDULED FOR DEMOLITION OR REMOVAL. PATCH AND REPAIR TO LIKE NEW CONDITION ANY DAMAGE TO EXISTING MATERIALS TO REMAIN.

G08. SALVAGE DOOR, FRAME, AND HARDWARE FOR REINSTALLATION WHERE COMPATIBLE WITH LOCK FUNCTION AND SWING DIRECTION OF NEW DOORS, AND APPROVED BY THE OWNER.

G09. ONE HEAT PUMP (HP) SERVING THE IT OFFICE MUST BE OPERATIONAL AT ALL TIMES. NEW HP MUST BE OPERATIONAL PRIOR TO WORK RELATED TO EXISTING HP BEGINNING.

DEMOLITION KEY NOTES: (DXX)

D01. DEMOLISH ALL RESTROOM FIXTURES, PLUMBING, MILLWORK, AND ACCESSORIES.

D02. DEMOLISH FLOOR FINISH AND WALL BASE TO SUBSTRATE.

D03. DEMOLISH GYPSUM WALL BOARD DOWN TO STUDS TO THE EXTENTS REQUIRED TO INSTALL NEW TILE BACKING PANELS.

D04. REMOVE ALL WALL PAPER FINISH THROUGHOUT.

D05. REMOVE WINDOW TREATMENTS AND VALANCES.

D06. DEMOLISH H.M. FRAMED GLAZED SIDE LITES.

D07. DEMOLISH BASE CABINETS, WORK SURFACES, AND WALL MOUNTED MILLWORK.

D08. DEMOLISH COUNTER MOUNTED FIXTURES AND PLUMBING BACK TO WALL.

D09. EX. SPRINKLER SYSTEM ANNUNCIATOR PANEL AND ACTIVATION SWITCH.

D10. EX. SPRINKLER MANIFOLD.

D11. EX. MAIN ELEC PANEL.

D12. EX. LOW VOLTAGE / COMMUNICATION BOARD.

D13. EX. SUMP PUMP BELOW SLAB.

D14. EX. AIR HANDLER.

D15. EX. RTU.

D16. EX. EXHAUST FAN.

D17. EX. VENT PIPE.

D18. EX. SCREEN ENCLOSURE.

D19. DEMOLISH BUR AS NECESSARY TO INSTALL NEW EQUIPMENT RAILS, APPROXIMATE LOCATION. COORDINATE W/ MEP.

D20. EX. ROOF ACCESS HATCH.

D21. EX. ROOF DRAIN & COVER.

D22. EX. CONDENSING UNIT, TO REMAIN.

D23. EX. EXIT SIGN, WALL MOUNTED FIRE ALARM SIGNAL, LIGHT SWITCH, AND WALL MOUNTED OCCUPANCY SENSOR TO BE REMOVED AND SALVAGED. PREPARE TO EXTEND ANY SYSTEMS FOR REINSTALLATION.

D24. EX. EXIT SIGN, WALL MOUNTED FIRE ALARM PULL STATION AND SIGNAL, THERMOSTAT, AND LIGHT SWITCH TO BE REMOVED AND SALVAGED. PREPARE TO EXTEND ANY SYSTEMS FOR REINSTALLATION.

D25. EX. ELEVATOR CALL BUTTONS / PANEL AND SAFETY SIGN TO BE REMOVED AND SALVAGED. PREPARE TO EXTEND ANY SYSTEMS FOR REINSTALLATION.

D26. EX. SANITARY STUB-UP IN SLAB. VERIFY SIZE AND LOCATION IN FIELD.

D27. EX. VENT PIPE. VERIFY SIZE AND LOCATION IN FIELD.

D28. SALVAGE COMBINATION LOCK AND LEVER HARDWARE FOR REINSTALLATION.

D29. DEMOLISH FURRED WALL SYSTEM TO THE EXTENTS INDICATED.

D30. REMOVE AND STORE EX HEAT PUMP FOR REINSTALLATION AND RECONNECTION IN THE SAME LOCATION. DEMOLISH HOUSEKEEPING PAD. DEMOLISH BUR AS NECESSARY TO INSTALL NEW EQUIPMENT RAILS.

D31. EXISTING BUILT-UP ROOF AND GRAVEL TO REMAIN, UNO.

D32. EXISTING PITCH POCKET PENETRATION. PREPARE TO RECEIVE NEW EQUIPMENT PENETRATIONS. COORDINATE WITH MEP

NOTES: DEMOLITION | B6

LEGEND: DEMOLITION | A6

- EXISTING WALLS/PARTITIONS TO BE DEMOLISHED
- EXISTING WALLS/PARTITIONS TO REMAIN
- EXISTING DOOR & FRAME TO BE DEMOLISHED
- EXISTING DOOR & FRAME TO REMAIN

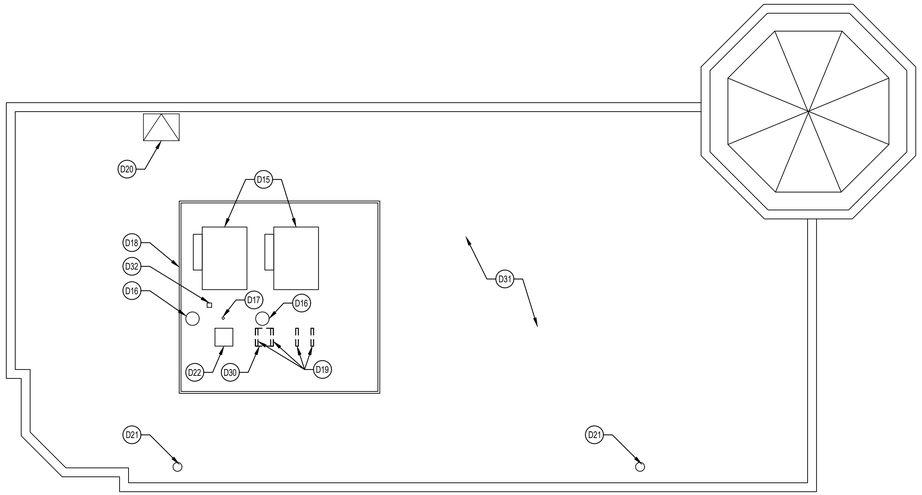

PROJECT NORTH

SCALE: 1/8" = 1'-0" 0 2' 4' 8' 16'

ROOF PLAN | D3

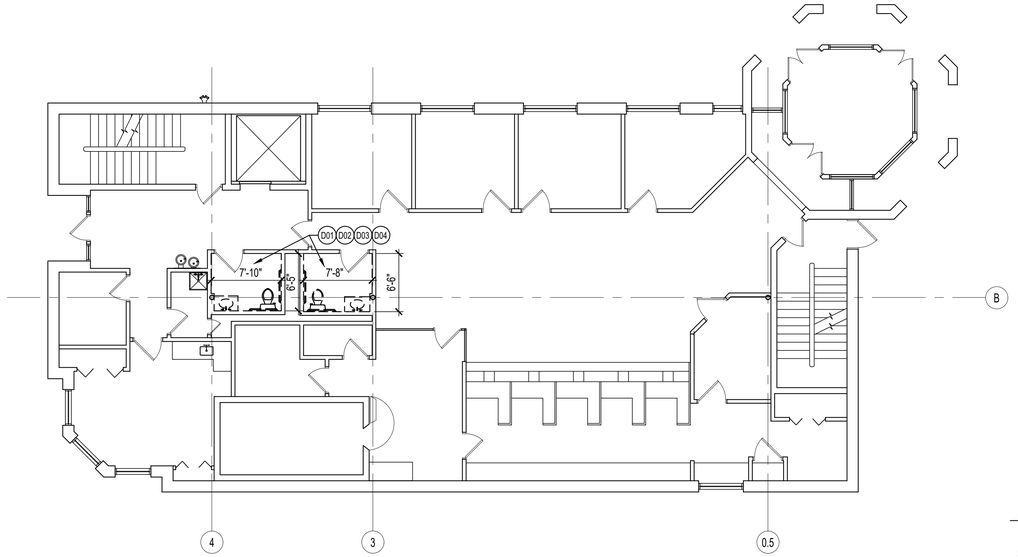

PROJECT NORTH

SCALE: 1/8" = 1'-0" 0 2' 4' 8' 16'

FIRST FLOOR PLAN | A3

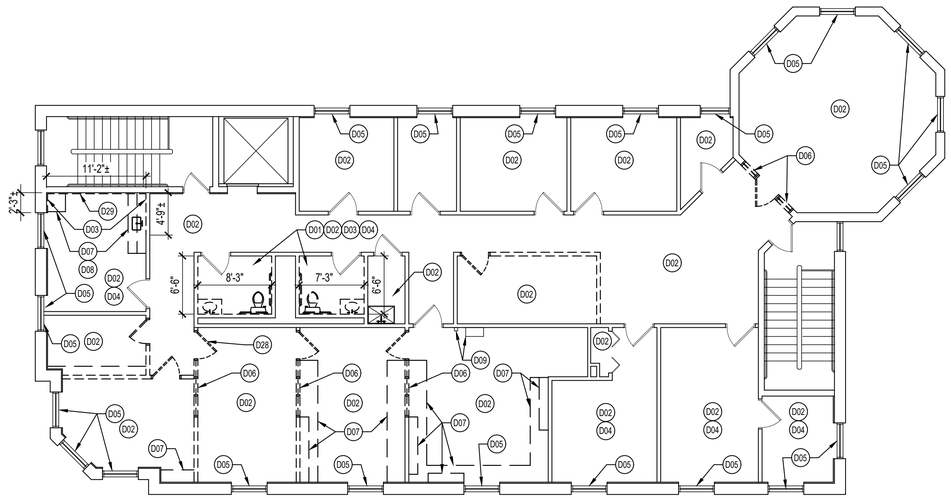

PROJECT NORTH

SCALE: 1/8" = 1'-0" 0 2' 4' 8' 16'

SECOND FLOOR PLAN | D1

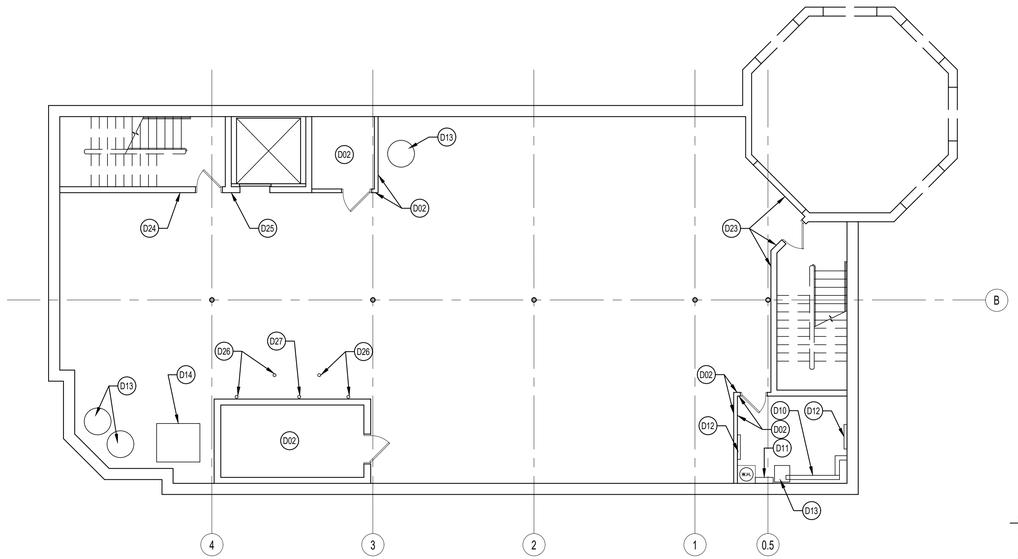

PROJECT NORTH

SCALE: 1/8" = 1'-0" 0 2' 4' 8' 16'

BASEMENT FLOOR PLAN | A1

FARMERS & MERCHANTS BANK

25 WESTMINSTER PIKE
REISTERTOWN, MARYLAND, 21136

INTERIOR ALTERATION

ARCHITECTURAL REGISTRATION BOARD
8586
TIMOTHY H. SANDERS
STATE OF MARYLAND

I CERTIFY THAT THESE DOCUMENTS WERE PREPARED OR APPROVED BY ME AND THAT I AM A DULY LICENSED ARCHITECT UNDER THE LAWS OF THE STATE OF MARYLAND.

LICENSE NO.: 8586

EXP. DATE: 21 MAY 2027

THESE DRAWINGS ARE NOT PERMITTED TO BE COPIED OR REPRODUCED, EITHER WHOLLY OR PARTIALLY, UNLESS WRITTEN PERMISSION IS FIRST OBTAINED FROM SANDERS DESIGNS, P.A.

SANDERS | DESIGNS
ARCHITECTS PLANNERS
WWW.SANDERSDESIGNS.COM
MAILBOX@SANDERSDESIGNS.COM
9727 GREENSIDE DRIVE, SUITE 202, COCKEYSVILLE, MARYLAND 21030
T: (410) 560 2624

No.	Date	Revision

Project No.: 26.102
Date: 29 SEPTEMBER 2026
Scale: 1/8" = 1'-0"
Edition: PERMIT SET

Drawing Name: DEMOLITION FLOOR PLANS

Drawing Number: AD101

RCP DEMOLITION GENERAL NOTES:

G01. OWNER WILL OCCUPY PORTIONS OF BUILDING. CONDUCT WORK TO AVOID DISRUPTING OPERATIONS.
G02. MAINTAIN ALL WARRANTIES FOR SYSTEMS AND ASSEMBLIES AFFECTED BY THE WORK. REMOVE, REPLACE, PATCH AND REPAIR MATERIALS CUT OR DAMAGED. COORDINATE W/ MFRS.
G03. SURVEY EXISTING CONDITIONS AND RECORD FINDINGS VIA NOTES AND PHOTOS.
G04. PROVIDE TEMPORARY DUST CONTROL MEASURES USING 10 MIL POLYETHYLENE SHEETS AND DUST-CONTROL ADHESIVE WALK-OFF MATS. COMPLY WITH ASTM E84.
G05. MAINTAIN ACCESS TO ALL STAIRS, ELEVATORS, AND EXITS FROM OCCUPIED PORTIONS OF THE BUILDING.
G06. SPACES SHOWN AS BLANK EITHER HAVE NO CEILING OR ARE EXISTING TO REMAIN.
G07. MAINTAIN FUNCTIONALITY AND CODE COMPLIANCE OF ALL FIRE SUPPRESSION AND FIRE ALARM SYSTEMS ACTIVE IN THE BUILDING. SCHEDULE ALL REQUIRED SHUT-DOWNS WITH THE OWNER AND LIMIT THEM TO THE SHORTEST TIME FRAMES POSSIBLE.
G08. REMOVE AND SALVAGE ALL CEILING MOUNTED EQUIPMENT NOT SPECIFICALLY NOTED FOR DEMOLITION FOR REINSTALLATION IN SIMILAR LOCATION.
G09. SALVAGE REMOVED CEILING PANELS IN BASEMENT, IN GOOD CONDITION, FOR USE IN REPLACING DAMAGED PANELS WHERE GRID IS TO REMAIN. FIELD VERIFY NUMBER OF DAMAGED PANELS TO BE REPLACED AND COORDINATE WITH DEMOLITION.
G10. PROVIDE SUPPORT FOR GRID TO REMAIN AS NECESSARY DURING DEMOLITION OF ADJACENT GRID AND PANELS
G11. REMOVE CEILING PANELS ON THE FIRST FLOOR WHERE REQUIRED TO ACCESS THE ABOVE CEILING SPACE FOR MEP WORK, WHETHER INDICATED ON THE DRAWINGS OR NOT. SALVAGE AND STORE FOR REINSTALLATION. RETAIN GRID SYSTEM WHERE POSSIBLE.

RCP DEMOLITION KEY NOTES: (DXX)

D01. APPROXIMATE LIMITS OF CEILING GRID DEMOLITION. COORDINATE WITH NEW WORK LAYOUT.
D02. DEMOLISH CEILING MOUNTED CHANDELIER.
D03. DEMOLISH WALL SCONCE BELOW BULKHEAD.
D04. DEMOLISH SPOT LIGHT MOUNTED ON BULKHEAD.
D05. EXISTING BULKHEAD TO REMAIN.
D06. DEMOLISH WALL MOUNTED VANITY LIGHT FIXTURE.
D07. OPEN TO GYPSUM CEILING ABOVE.

NOTES: DEMOLITION RCP | A6

ACOUSTIC CEILING GRID & PANEL TO REMAIN
MECHANICAL EQUIPMENT TO REMAIN
DEMOLISHED ACOUSTIC CEILING GRID & PANEL
REMOVED MECHANICAL EQUIPMENT SALVAGE FOR REINSTALLATION
DEMOLISHED LIGHT FIXTURE
REMOVED EXIT SIGN SALVAGE FOR REINSTALLATION
DEMOLISHED SPOT LIGHT
DEMOLISHED WALL SCONCE

LEGEND: DEMOLITION RCP | D3

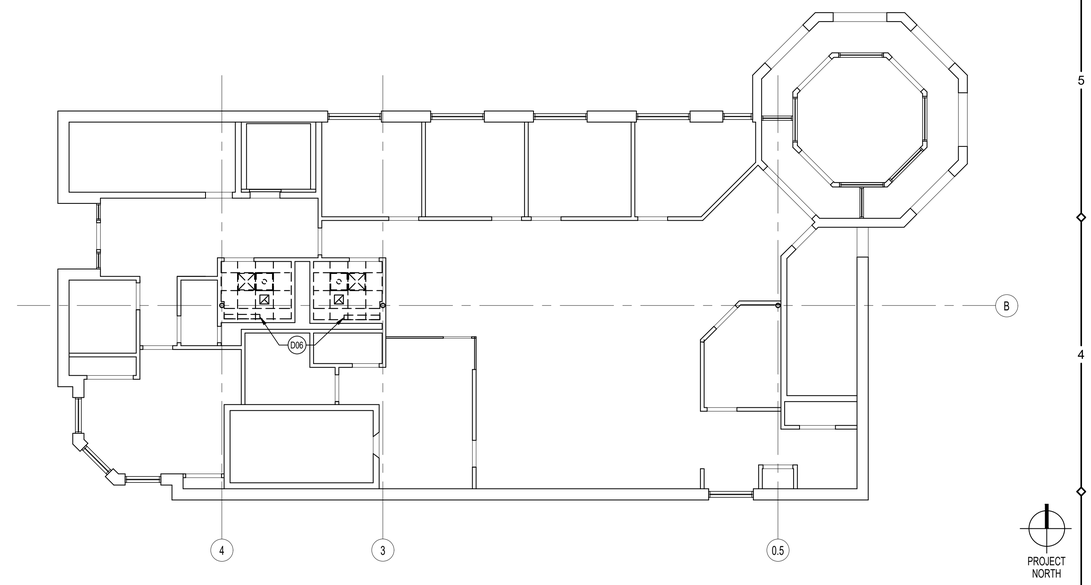

SCALE: 1/8" = 1'-0" 0 2' 4' 8' 16'

FIRST FLOOR RCP | A3

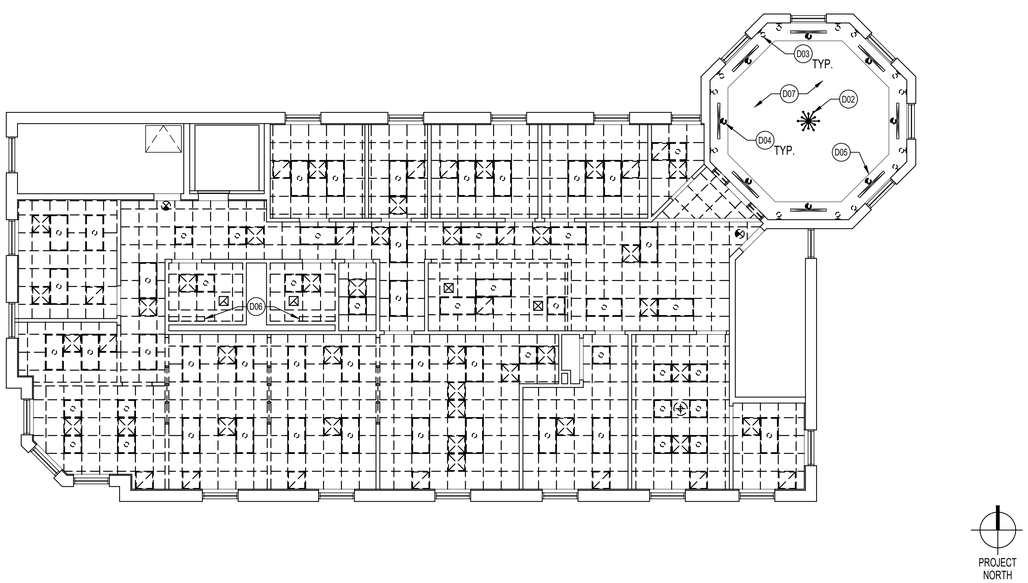

SCALE: 1/8" = 1'-0" 0 2' 4' 8' 16'

SECOND FLOOR RCP | D1

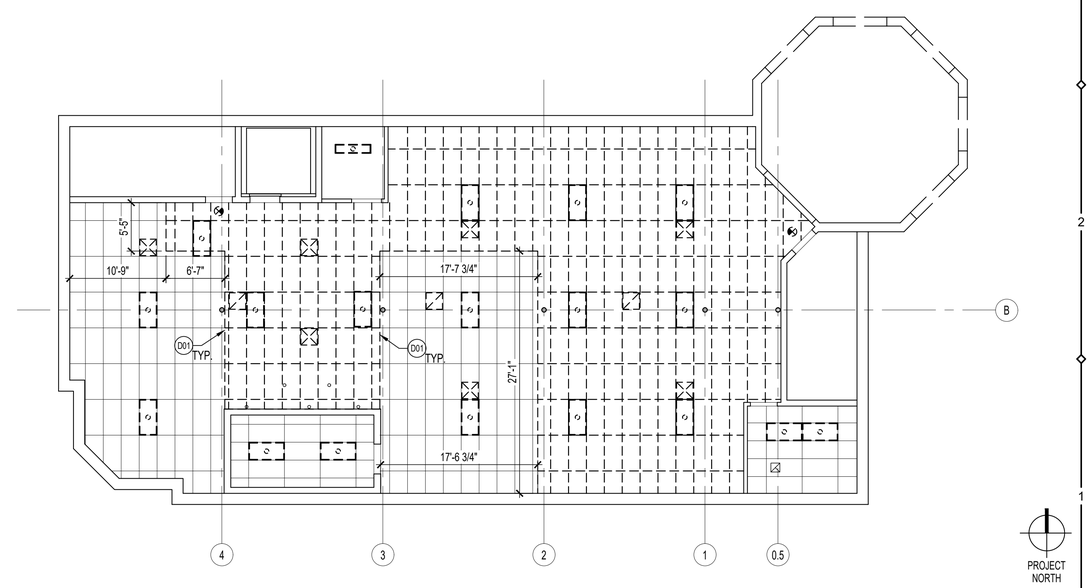

SCALE: 1/8" = 1'-0" 0 2' 4' 8' 16'

BASEMENT RCP | A1

FARMERS & MERCHANTS BANK
25 WESTMINSTER PIKE
REISTERTOWN, MARYLAND, 21136
INTERIOR ALTERATION

ARCHITECTURAL REGISTRATION BOARD
8586
TIMOTHY H. SANDERS
STATE OF MARYLAND

I CERTIFY THAT THESE DOCUMENTS WERE PREPARED OR APPROVED BY ME AND THAT I AM A DULY LICENSED ARCHITECT UNDER THE LAWS OF THE STATE OF MARYLAND.

LICENSE NO.: 8586
EXP. DATE: 21 MAY 2027

THESE DRAWINGS ARE NOT PERMITTED TO BE COPIED OR REPRODUCED, EITHER WHOLLY OR PARTIALLY, UNLESS WRITTEN PERMISSION IS FIRST OBTAINED FROM SANDERS DESIGNS, P.A.

SANDERS | DESIGNS
ARCHITECTS PLANNERS
WWW.SANDERSDESIGNS.COM
MAILBOX@SANDERSDESIGNS.COM
9727 GREENSIDE DRIVE, SUITE 202, COCKEYSVILLE, MARYLAND 21030
T: (410) 560 2624

No.	Date	Revision

Project No.: 26.102
Date: 29 SEPTEMBER 2026
Scale: 1/8" = 1'-0"
Edition: PERMIT SET
Drawing Name: DEMOLITION RCPs
Drawing Number: AD111

PLAN GENERAL NOTES:

G01. OWNER WILL OCCUPY PORTIONS OF BUILDING. CONDUCT WORK TO AVOID DISRUPTING OPERATIONS.

G02. MAINTAIN ALL WARRANTIES FOR SYSTEMS AND ASSEMBLIES AFFECTED BY THE WORK. REMOVE, REPLACE, PATCH AND REPAIR MATERIALS CUT OR DAMAGED. COORDINATE W/ MFRS.

G03. PROVIDE TEMPORARY DUST CONTROL MEASURES USING 10 MIL POLYETHYLENE SHEETS AND DUST-CONTROL ADHESIVE WALK-OFF MATS. COMPLY WITH ASTM E84.

G04. MAINTAIN ACCESS TO ALL STAIRS, ELEVATORS, AND EXITS FROM OCCUPIED PORTIONS OF THE BUILDING.

G05. PROVIDE REVISED FIRE SUPPRESSION SYSTEM DESIGN AND PERMITS UTILIZING THE EXISTING SYSTEM BASED ON THE REVISED BUILDING LAYOUT.

G06. PROVIDE REVISED FIRE ALARM SYSTEM DESIGN AND PERMITS UTILIZING THE EXISTING SYSTEM BASED ON THE REVISED BUILDING LAYOUT. MATCH EXISTING EQUIPMENT AND MOUNTING TYPE.

G07. THE OWNER REQUESTS THE USE OF THE SUB-CONTRACTORS LISTED AS A PREFERRED VENDOR FOR THE PROJECT.

G08. ONE HEAT PUMP (HP) SERVING THE IT OFFICE MUST BE OPERATIONAL AT ALL TIMES. NEW HP MUST BE OPERATIONAL PRIOR TO WORK RELATED TO EXISTING HP BEGINNING.

G09. INSTALL NEW AND EXISTING CONDENSATE LINES, ELECTRICAL CONDUIT, AND COOLANT LINES ON EQUIPMENT SUPPORTS. SEE DETAIL G3/A702. PROVIDE SUPPORTS AT MANUFACTURER RECOMMENDED INTERVALS.

PLAN KEY NOTES: (XX)

01. REINSTALL EXIT SIGN, WALL MOUNTED FIRE ALARM SIGNAL, LIGHT SWITCH, AND WALL MOUNTED OCCUPANCY SENSOR ON NEW FINISHED WALL SURFACE. EXTEND ANY SYSTEMS FOR REINSTALLATION AS REQUIRED.

02. REINSTALL EXIT SIGN, WALL MOUNTED FIRE ALARM PULL STATION AND SIGNAL, THERMOSTAT, AND LIGHT SWITCH ON NEW FINISHED WALL SURFACE. EXTEND ANY SYSTEMS FOR REINSTALLATION AS REQUIRED.

03. REINSTALL ELEVATOR CALL BUTTONS / PANEL AND SAFETY SIGN ON NEW FINISHED WALL SURFACE. EXTEND ANY SYSTEMS FOR REINSTALLATION AS REQUIRED.

04. INSTALL SALVAGED COMBINATION LOCK AND LEVER HARDWARE. COORDINATE WITH DOOR SCHEDULE.

05. INSTALL TILE BACKING PANELS OVER FRAMING AND PREPARE TO RECEIVE NEW FINISH. COORDINATE WITH FINISH SCHEDULE AND ELEVATIONS.

06. COORDINATE INSTALLATION OF WINDOW TREATMENTS AT ALL WINDOWS WITH OWNER'S PREFERRED VENDOR.

07. PROVIDE BLOCKING AND / OR FRT STUDS WITHIN THE METAL FRAMING AS REQUIRED FOR ATTACHMENT OF CONCEALED SUPPORT BRACKETS AT VANITY.

08. PROVIDE 5/8" SOUNDBREAK XP BY NATIONAL GYPSUM, OR EQUAL, ON BOTH SIDES OF CONFERENCE ROOM WALL; STC-45 MINIMUM.

09. NEW HEAT PUMP INSTALLED ON NEW EQUIPMENT RAILS. SEE DETAIL G5/A702. COORDINATE RAIL SIZE AND LOCATION WITH SPECIFIED EQUIPMENT REQUIREMENTS.

10. REINSTALL EXISTING HEAT PUMP ON NEW EQUIPMENT RAILS. SEE DETAIL G5/A702. COORDINATE RAIL SIZE AND LOCATION WITH EQUIPMENT REQUIREMENTS.

11. PATCH AND REPAIR EXISTING PITCH POCKET AFTER INSTALLING NEW EQUIPMENT PENETRATIONS. SEE DETAIL G4/A702.

NOTES: PLAN | C6

PREFERRED VENDORS LIST

WINDOW TREATMENTS: TIRALLA'S INC, ADDRESS: 2 WOLF AVE. REISTERSTOWN, MD 21136, PHONE: 410-833-2107

HVAC: FLO-TRON CONTRACTING INC, ADDRESS: 220 COCKEYSVILLE RD, COCKEYSVILLE, MD 21030, PHONE: 410-527-0060

PAINTING: PRIDE PAITING, ADDRESS: 1940 BETHEL RD, FINKSBURG, MD 21048, PHONE: 410-876-8322

SIGNAGE: STRATEGIC FACTORY, ADDRESS: 10324 S DOLFIELD RD, OWINGS MILLS, MD 21117, PHONE: 443-548-3500

B6

LEGEND: PLAN

- EXISTING WALL / PARTITION
- EXISTING DOOR
- NEW WALL/PARTITION
- NEW DOOR
- NEW INTERIOR GLAZED WALL
- FE — FIRE EXTINGUISHER AND CABINET LARSEN'S 2409-R4 AND MP5

A6

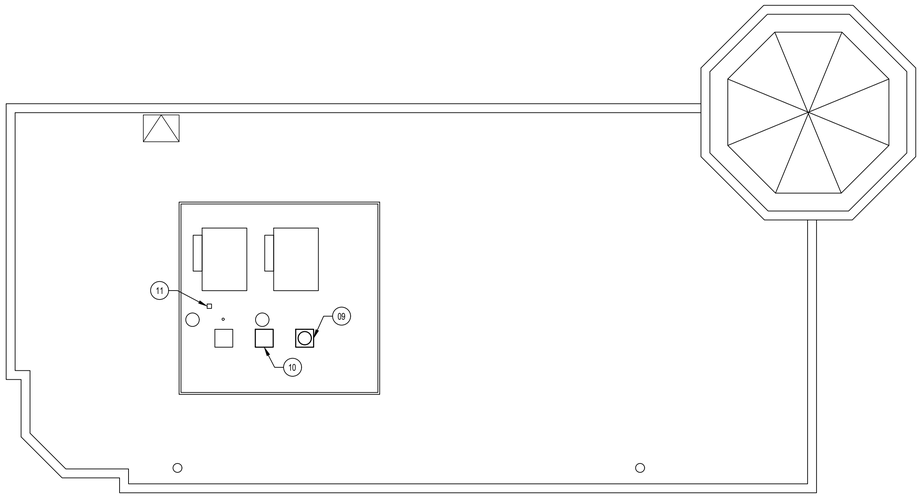

PROJECT NORTH

SCALE: 1/8" = 1'-0" 0 2' 4' 8' 16'

ROOF PLAN | D3

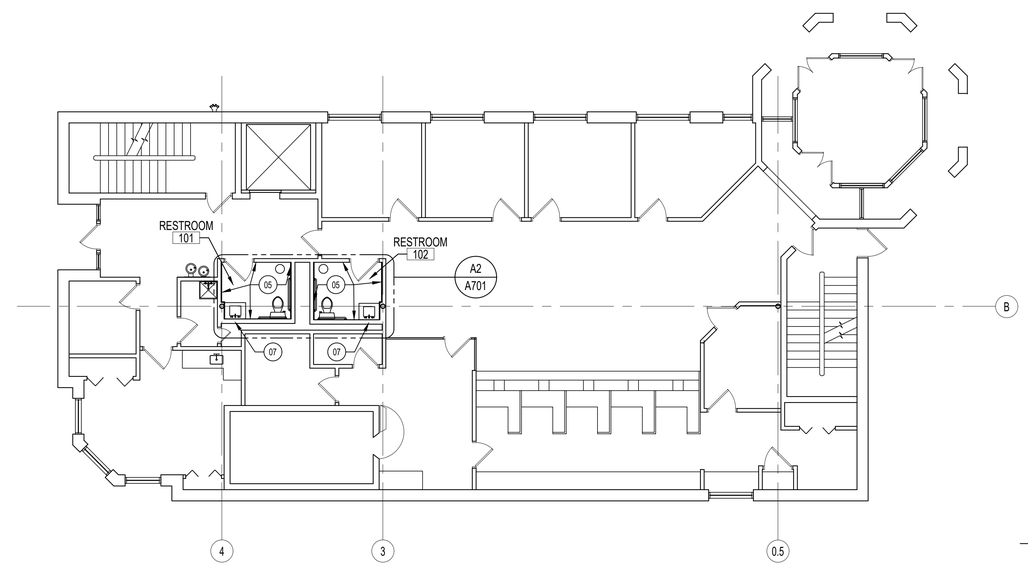

PROJECT NORTH

SCALE: 1/8" = 1'-0" 0 2' 4' 8' 16'

FIRST FLOOR PLAN | A3

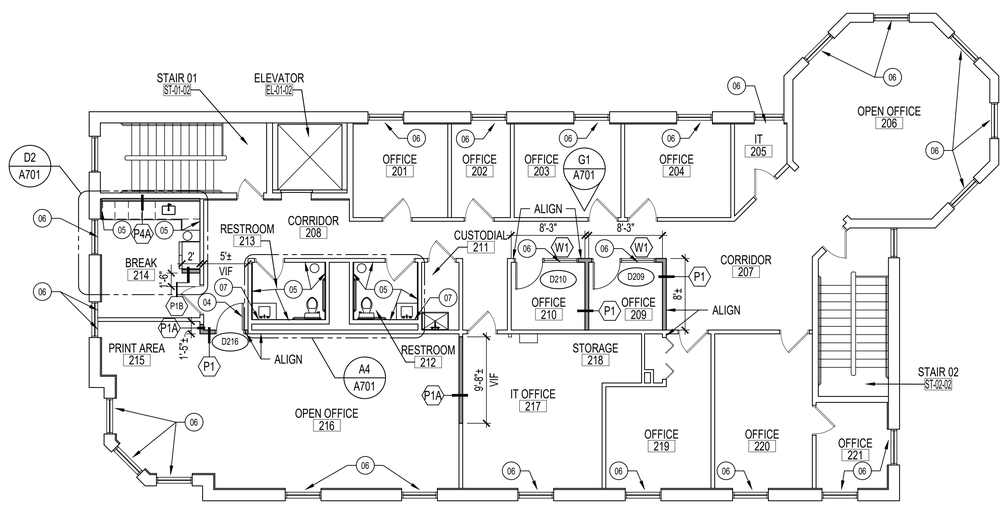

PROJECT NORTH

SCALE: 1/8" = 1'-0" 0 2' 4' 8' 16'

SECOND FLOOR PLAN | D1

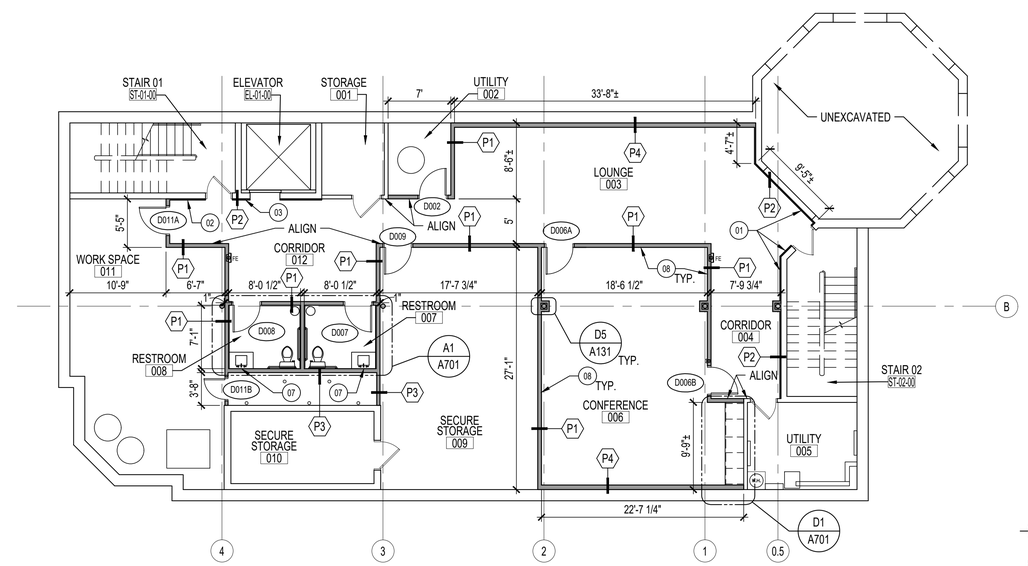

PROJECT NORTH

SCALE: 1/8" = 1'-0" 0 2' 4' 8' 16'

BASEMENT FLOOR PLAN | A1

FARMERS & MERCHANTS BANK

25 WESTMINSTER PIKE
REISTERTOWN, MARYLAND, 21136

INTERIOR ALTERATION

ARCHITECTURAL REGISTRATION BOARD
8586
TIMOTHY H. SANDERS
STATE OF MARYLAND

I CERTIFY THAT THESE DOCUMENTS WERE PREPARED OR APPROVED BY ME AND THAT I AM A DULY LICENSED ARCHITECT UNDER THE LAWS OF THE STATE OF MARYLAND.

LICENSE NO.: 8586

EXP. DATE: 21 MAY 2027

THESE DRAWINGS ARE NOT PERMITTED TO BE COPIED OR REPRODUCED, EITHER WHOLLY OR PARTIALLY, UNLESS WRITTEN PERMISSION IS FIRST OBTAINED FROM SANDERS DESIGNS, P.A.

SANDERS | DESIGNS
ARCHITECTS PLANNERS
WWW.SANDERSDESIGNS.COM
MAILBOX@SANDERSDESIGNS.COM
9727 GREENSIDE DRIVE, SUITE 202, COCKEYSVILLE, MARYLAND 21030 T: (410) 560 2624

No.	Date	Revision

Project No.: 26.102
Date: 29 SEPTEMBER 2026
Scale: 1/8" = 1'-0"
Edition: PERMIT SET

Drawing Name: RENOVATION FLOOR PLANS

Drawing Number: A101

RCP GENERAL NOTES:

G01. NEW FINISHED CEILING HEIGHTS TO MATCH EXISTING.
G02. PROVIDE REVISED FIRE SUPPRESSION SYSTEM DESIGN AND PERMITS UTILIZING THE EXISTING SYSTEM BASED ON THE REVISED BUILDING LAYOUT.
G03. PROVIDE REVISED FIRE ALARM SYSTEM DESIGN AND PERMITS UTILIZING THE EXISTING SYSTEM BASED ON THE REVISED BUILDING LAYOUT. MATCH EXISTING EQUIPMENT AND MOUNTING TYPE.
G04. REINSTALL EXISTING CEILING MOUNTED EQUIPMENT AND FIXTURES, IN SPACES THAT ARE NOT RECONFIGURED, IN THE SAME LOCATIONS, UNLESS NEW EQUIPMENT IS SCHEDULED.
G05. COORDINATE WITH MEP DOCUMENTS FOR INSTALLATION OF NEW EQUIPMENT AND LIGHTING.
G06. ALL LIGHTING SHOWN IS NEW, UNLESS NOTED OTHERWISE. LIGHTING INSTALLED IN SPACES THAT ARE NOT RECONFIGURED ARE TO BE INSTALLED IN THE SAME LOCATION AS DEMOLISHED LIGHTING.
G07. REINSTALL SALVAGED CEILING PANELS REMOVED TO ACCESS THE ABOVE CEILING SPACE ON THE FIRST FLOOR FOR MEP RELATED WORK. REPLACE ANY DAMAGED TILES, AND REPAIR ANY GRID REMOVED OR DAMAGED DURING THE WORK.

RCP KEY NOTES: (XX)

01. EXISTING BULKHEAD BELOW. INSTALL NEW COVE LIGHTING ON TOP OF BULKHEAD.
02. INSTALL NEW METAL STUD JOISTS AND SUPPORT TRACK ATTACHED TO EXISTING CMU WALL WITH 1/2-INCH MASONRY ANCHORS AT 12 INCHES O.C. AND 6 INCHES FROM THE ENDS. METAL STUD STRUCTURAL DESIGN IS BY THE SUPPLIER TO SUPPORT APC CEILING, COORDINATE WITH MANUFACTURER REQUIREMENTS. INSTALL APC CEILING 6 INCHES ABOVE THE EXISTING BULKHEAD, VERIFY HEIGHT IN FIELD. INSTALL JOISTS AT A HEIGHT APPROPRIATE FOR THE APC HEIGHT.
03. CEILING OPEN TO STRUCTURE ABOVE.

NOTES: RCP | A6

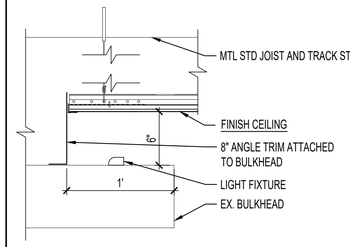

SCALE: 1-1/2" = 1'-0"

CEILING COVE DETAIL | E5

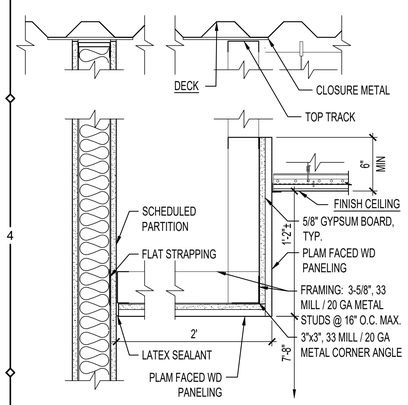

SCALE: 1-1/2" = 1'-0"

BULKHEAD DETAIL | F3

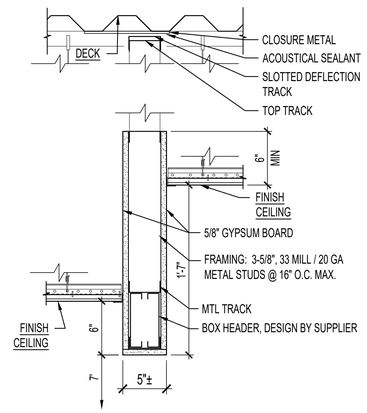

SCALE: 1-1/2" = 1'-0"

BULKHEAD DETAIL | E3

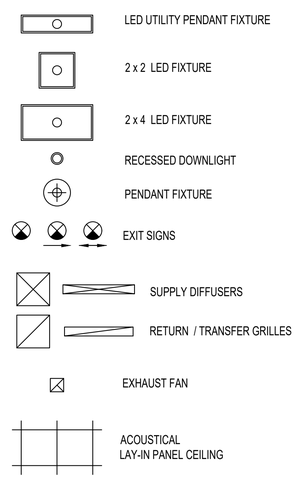

LEGEND: RCP | C3

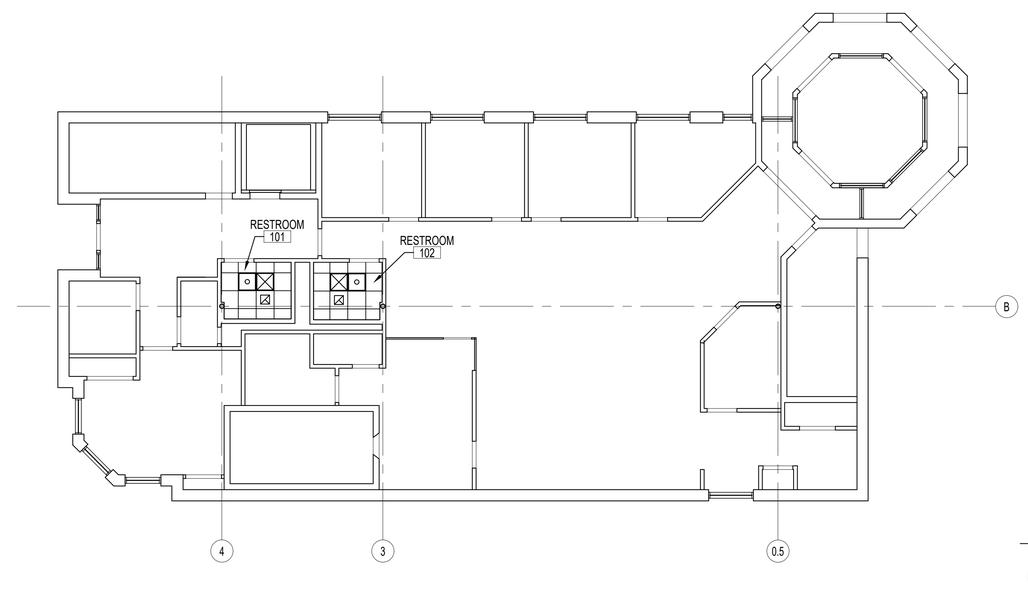

SCALE: 1/8" = 1'-0"

FIRST FLOOR RCP | A3

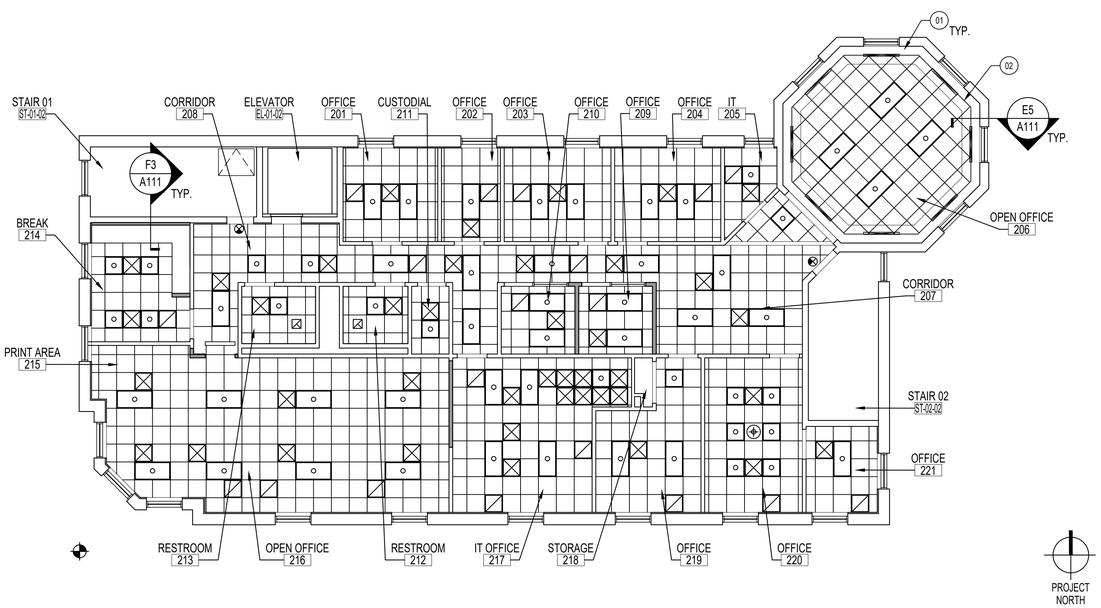

SCALE: 1/8" = 1'-0"

SECOND FLOOR RCP | D1

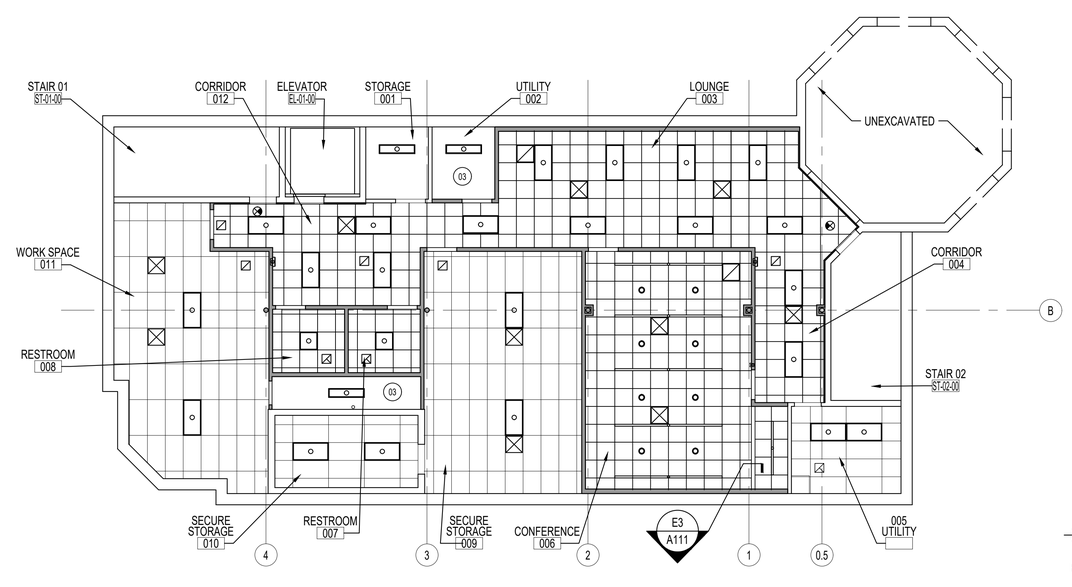

SCALE: 1/8" = 1'-0"

BASEMENT RCP | A1

FARMERS & MERCHANTS BANK

25 WESTMINSTER PIKE
REISTERTOWN, MARYLAND, 21136
INTERIOR ALTERATION

ARCHITECTURAL REGISTRATION BOARD 8586 TIMOTHY H. SANDERS STATE OF MARYLAND

I CERTIFY THAT THESE DOCUMENTS WERE PREPARED OR APPROVED BY ME AND THAT I AM A DULY LICENSED ARCHITECT UNDER THE LAWS OF THE STATE OF MARYLAND.

LICENSE NO.: 8586

EXP. DATE: 21 MAY 2027

THESE DRAWINGS ARE NOT PERMITTED TO BE COPIED OR REPRODUCED, EITHER WHOLLY OR PARTIALLY, UNLESS WRITTEN PERMISSION IS FIRST OBTAINED FROM SANDERS DESIGNS, P.A.

SANDERS | DESIGNS
ARCHITECTS PLANNERS
WWW.SANDERSDESIGNS.COM
MAILBOX@SANDERSDESIGNS.COM
9727 GREENSIDE DRIVE, SUITE 202, COCKEYSVILLE, MARYLAND 21030
T: (410) 560 2624

No.	Date	Revision

Project No.: 26.102
Date: 29 SEPTEMBER 2026
Scale: 1/8" = 1'-0"
Edition: PERMIT SET
Drawing Name: RENOVATION RCPs
Drawing Number: A111

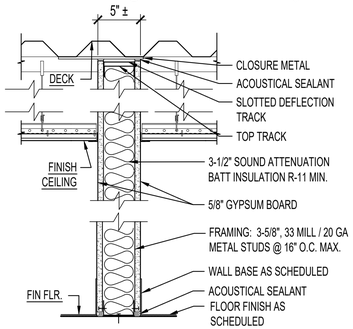

P1 SHOWN, STC 40 MINIMUM

P1A WALL INFILL TO MATCH EXISTING CONSTRUCTION AND SIZE. VERIFY EXISTING CONDITIONS IN FIELD

P1B FRAMING: 2-1/2", 33 MILL / 20 GA MTL STUDS, 1/2" GYPSUM BD BOTH SIDES, PLAM FACED WD

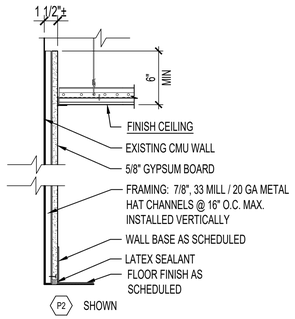

P2 SHOWN

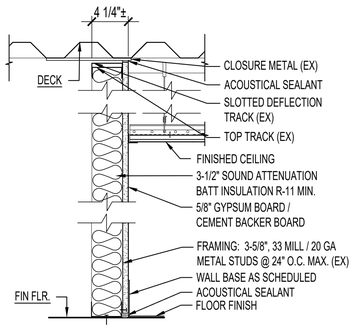

P3 SHOWN

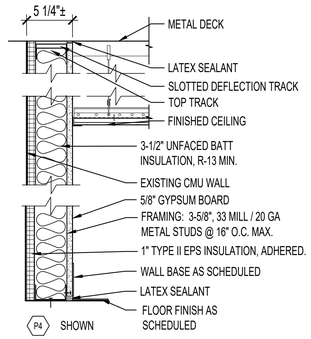

P4 SHOWN

P4A FRAMING: 2-1/2", 33 MILL / 20 GA METAL STUDS @ 16" O.C. MAX. 1/2" GYP BD / 1/2" CEMENT BACKER BOARD. NO INSULATION. 3 1/2"± TOTAL THICKNESS.

SCALE: 1-1/2" = 1'-0" 0 1" 3" 6" 1' 2'

PARTITION SCHEDULE | E3

FURN., EQUIP., & FINISH GENERAL NOTES:

G01. PREPARE ALL SUBSTRATES TO RECEIVE FINISHES SPECIFIED. COORDINATE W/ MFRS RECOMMENDATIONS. BEGIN FINISH WORK ONLY WHEN SURFACES AND CONDITIONS ARE IN ACCORDANCE WITH PRODUCT MANUFACTURER'S SPECIFICATIONS.

G02. HANDLE AND STORE MATERIALS ACCORDING TO PRODUCT MANUFACTURER'S INSTRUCTIONS WITHIN CONFINES OF PROJECT.

G03. REMOVE WASTE MATERIALS FROM THE PREMISES DAILY.

G04. PROVIDE TRANSITION STRIPS AT FLOORING MATERIAL CHANGES.

G05. PROVIDE MOISTURE / MOLD RESISTANT FIBERGLASS FACED GYPSUM BOARD IN ALL WET AREAS. USE TILE BACKING PANES IN RESTROOM AND BREAK ROOM WALLS WHERE CERAMIC TILE OR SOLID SURFACING IS THE SCHEDULE FINISH.

G06. COORDINATE W/ FINISH SCHEDULE.

G07. FURNITURE IS PROVIDED AND INSTALLED BY OWNER. LOCATIONS SHOWN ARE APPROXIMATE AND FOR REFERENCE ONLY. COORDINATE WITH FINAL OWNER SELECTIONS AND LAYOUT.

G08. COORDINATE POWER AND DATA LOCATIONS WITH FINAL FURNITURE LAYOUT.

G09. CERAMIC FLOOR TILE ON CONCRETE SUBFLOOR IS TO BE INSTALLED ON FLEECE WEBBED POLYETHYLENE WATERPOOF MEMBRANE, WITH THINSET MODIFIED DRY-SET MORTAR AND HIGH-PERFORMANCE POLYMER TYPE SANDED GROUT. TURN MEMBRANE UP 4" AT WALLS.

G10. PERFORM MOISTURE CONTENT TESTING OF BASEMENT SLAB PRIOR TO INSTALLATION OF ANY FINISH MATERIALS. CONFIRM RESULTS ARE WITHIN INDUSTRY STANDARD ALLOWANCES.

G11. ALL ADHESIVES USED FOR THE INSTALLATION OF FINISHED MATERIALS SHALL BE WATER- AND MILDEW-RESISTANT, NON-STAINING, AND MEET VOC REQUIREMENTS OF THE CURRENT EDITION SCAQMD RULE 1168

G12. INSTALL MANUFACTURER'S STANDARD GROUT JOINT SEALANT AT ALL CERAMIC FLOOR TILE LOCATIONS.

FURNITURE PLAN KEY NOTES: (XX)

01. POWER AND DATA TO BE PROVIDED TO CUBICLES FROM THE CEILING VIA MANUFACTURER SUPPLIED POWER COLUMN. PROVIDE WHIPS FOR INSTALLATION AND CONNECTION AS NECESSARY.

02. POWER AND DATA TO BE PROVIDED TO CUBICLES IN THE ADJACENT WALL. PROVIDE WHIPS FOR INSTALLATION AND CONNECTION AS NCESSARY.

03. APPROXIMATE LOCATION OF SERVER.

04. APPROXIMATE LOCATION OF CURRENT DATA CABLING ABOVE CEILING. RELOCATE DATA IN THE CEILING ON THE SOUTH WALL TO ABOVE THE CEILING AT THE SERVER.

NOTES: PLAN | A6

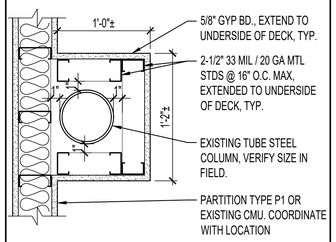

0 1" 3" 6" 1' 2'

SCALE: 1-1/2" = 1'-0"

COLUMN BUILD-OUT DETAIL | D3

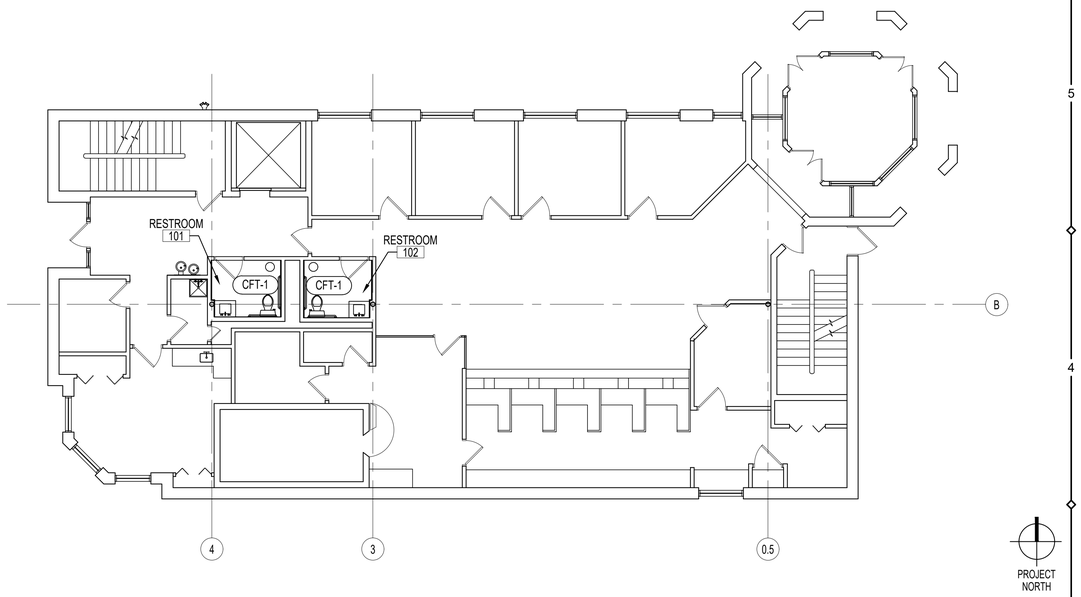

SCALE: 1/8" = 1'-0" 0 2' 4' 8' 16'

FIRST FLOOR PLAN | A3

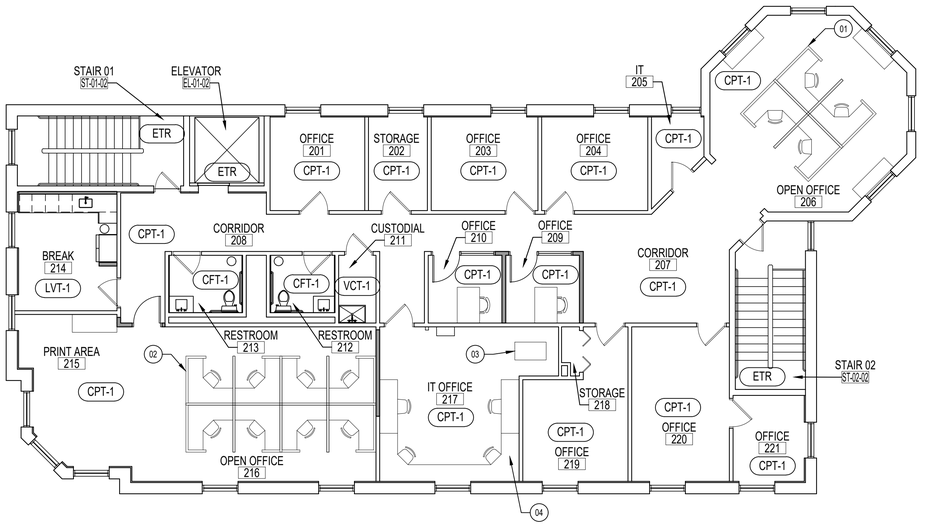

SCALE: 1/8" = 1'-0" 0 2' 4' 8' 16'

SECOND FLOOR PLAN | D1

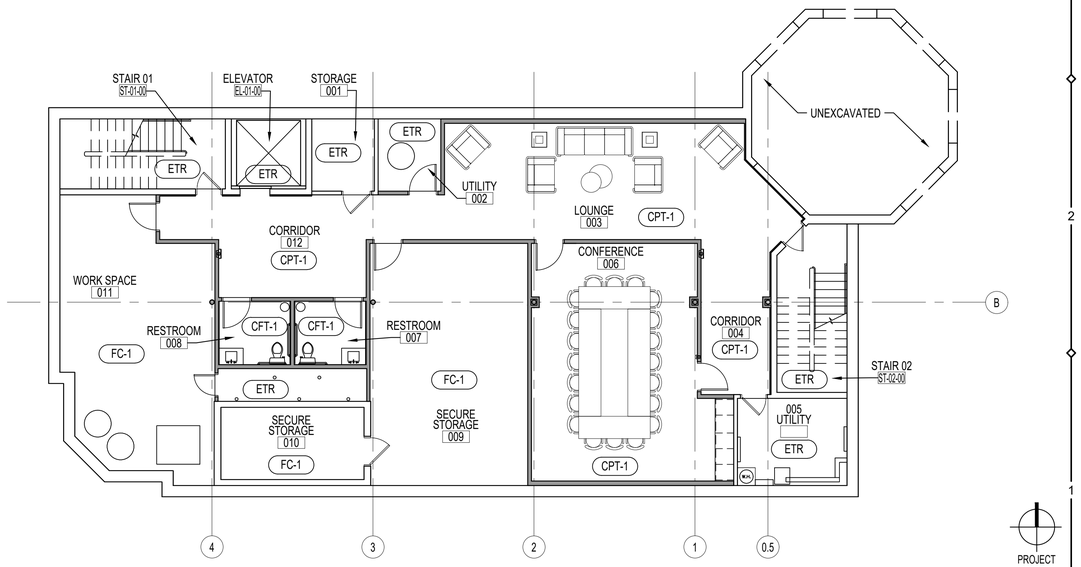

SCALE: 1/8" = 1'-0" 0 2' 4' 8' 16'

BASEMENT FLOOR PLAN | A1

FARMERS & MERCHANTS BANK

25 WESTMINSTER PIKE
REISTERTOWN, MARYLAND. 21136

INTERIOR ALTERATION

ARCHITECTURAL REGISTRATION BOARD
8586
TIMOTHY H. SANDERS
STATE OF MARYLAND

I CERTIFY THAT THESE DOCUMENTS WERE PREPARED OR APPROVED BY ME AND THAT I AM A DULY LICENSED ARCHITECT UNDER THE LAWS OF THE STATE OF MARYLAND.

LICENSE NO.: 8586

EXP. DATE: 21 MAY 2027

THESE DRAWINGS ARE NOT PERMITTED TO BE COPIED OR REPRODUCED, EITHER WHOLLY OR PARTIALLY, UNLESS WRITTEN PERMISSION IS FIRST OBTAINED FROM SANDERS DESIGNS, P.A.

SANDERS | DESIGNS
ARCHITECTS PLANNERS
WWW.SANDERSDESIGNS.COM
9727 GREENSIDE DRIVE, SUITE 202, COCKEYSVILLE, MARYLAND 21030
MAILBOX@SANDERSDESIGNS.COM
T: (410) 560 2624

No.	Date	Revision

Project No.: 26.102
Date: 29 SEPTEMBER 2026
Scale: 1/8" = 1'-0"
Edition: PERMIT SET

Drawing Name: FURN., FINISH, & EQUIP. PLANS

Drawing Number: A131

GENERAL			DOOR						FRAME						HRDWR SET #	REMARKS	NO.
NO.	ROOM NAME	FIRE RATING	SIZE (W x H x T)	ELEV.	CORE	VENEER	FINISH	GLAZING	ELEV.	MATERIAL	FINISH	HEAD	JAMB	SILL			
BASEMENT																	
D002	UTILITY	---	3'-0" x 7'-0" x 1-3/4"	D1	SCWD	MDO	PT-4	---	F1	HM-1	PT-4	H1	J1	S4	HW-3	1	D002
D006A	CONFERENCE	---	3'-0" x 7'-0" x 1-3/4"	D1	SCWD	MDO	PT-4	---	F1	HM-1	PT-4	H1	J1	S1	HW-1		D006A
D006B	CONFERENCE	---	3'-0" x 7'-0" x 1-3/4"	D1	SCWD	MDO	PT-4	---	F1	HM-1	PT-4	H1	J1	S1	HW-1		D006B
D007	RESTROOM	---	3'-0" x 7'-0" x 1-3/4"	D1	SCWD	MDO	PT-4	---	F1	HM-1	PT-4	H1	J1	S3	HW-2		D007
D008	RESTROOM	---	3'-0" x 7'-0" x 1-3/4"	D1	SCWD	MDO	PT-4	---	F1	HM-1	PT-4	H1	J1	S3	HW-2		D008
D009	SECURE STORAGE	---	3'-0" x 7'-0" x 1-3/4"	D1	SCWD	MDO	PT-4	---	F1	HM-2	PT-4	H1	J1	S2	HW-3	1,3	D009
D011A	WORK SPACE	---	3'-0" x 7'-0" x 1-3/4"	D1	SCWD	MDO	PT-4	---	F1	HM-2	PT-4	H1	J1	S2	HW-3	1,3	D011A
D011B	CHASE	---	2'-4" x 7'-0" x 1-3/4"	D1	SCWD	MDO	PT-4	---	F1	HM-2	PT-4	H1	J1	S2	HW-3	1,4	D011A
FIRST FLOOR																	
D101	RESTROOM	---	ETR	ETR	ETR	ETR	PT-4	ETR	ETR	ETR	PT-4	ETR	ETR	S3	ETR	2	D101
D102	RESTROOM	---	ETR	ETR	ETR	ETR	PT-4	ETR	ETR	ETR	PT-4	ETR	ETR	S3	ETR	2	D102
SECOND FLOOR																	
D209	OFFICE	---	3'-0" x 7'-0" x 1-3/4"	D1	SCWD	MDO	PT-4	---	F1	HM-1	PT-4	H2	J1	S1	HW-1		D209
D210	OFFICE	---	3'-0" x 7'-0" x 1-3/4"	D1	SCWD	MDO	PT-4	---	F1	HM-1	PT-4	H2	J1	S1	HW-1		D210
D212	RESTROOM	---	ETR	ETR	ETR	ETR	PT-4	ETR	ETR	ETR	PT-4	ETR	ETR	S3	ETR	2	D212
D213	RESTROOM	---	ETR	ETR	ETR	ETR	PT-4	ETR	ETR	ETR	PT-4	ETR	ETR	S3	ETR	2	D213
D216	OPEN OFFICE	---	3'-0" x 7'-0" x 1-3/4"	D1	SCWD	MDO	PT-4	---	F1	HM-2	PT-4	H1	J1	S1	HW-4	3	D216

KEY TO DOOR SCHEDULE

FINISHES:
1. SEE FINISH SCHEDULE FOR DESCRIPTION OF DOOR & FRAME FINISHES
2. ALL EXISTING DOORS AND FRAMES ON THE SECOND FLOOR ARE TO RECEIVE NEW PAINT FINISH TO MATCH ADJACENT NEW DOORS AND FRAMES.

DOOR AND FRAME MATERIAL:
- HM-1: SDI LEVEL 1, 18GA WELDED HOLLOW METAL
- HM-2: SDI LEVEL 3, 16 GA WELDED HOLLOW METAL
- SCWD: SOLID-CORE WOOD, 5 PLY
- MDO: MEDIUM DENSITY OVERLAY

REMARKS:
1. DOOR IN SMOKE BARRIER ASSEMBLY. MAXIMUM SILL GAP IS 3/4-INCH.
2. COORDINATE SILL WITH EXISTING DOOR CONDITION. VERIFY IN FIELD.
3. PROVIDE ANSI / WDMA I.S. 1A HEAVY DUTY GRADE DOOR.
4. DOOR DETAILS SIMILAR, COORDINATE WITH PARTITION TYPE AND FINISHES SCHEDULED

DOOR SCHEDULE | D5

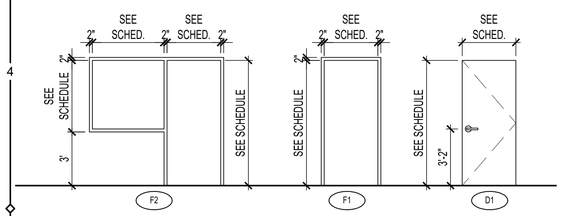

SCALE: 1/4" = 1'-0"

DOOR ELEVATIONS | F4

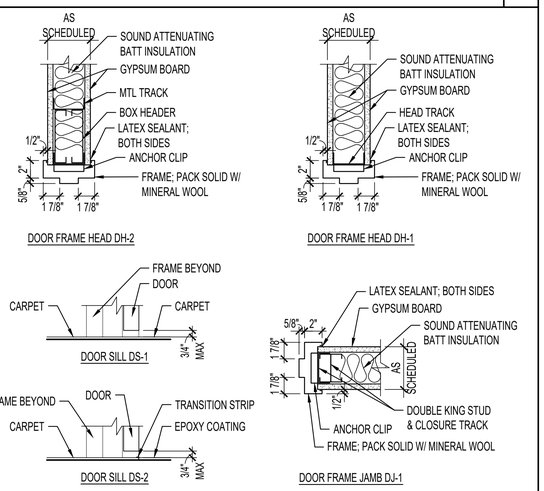

SCALE: 1-1/2" = 1'-0"

DOOR DETAILS | D3

NUMBER	WINDOW		FRAME		DETAILS			FIRE RATING	REMARKS	NUMBER
	NOMINAL SIZE (W x H)	GLAZING	MATERIAL	FINISH	HEAD	JAMB	SILL			
W1	4'-0" x 3'-10"	GL-1	HM-1	PT-4	WH-1	WJ-1	WS-1	---	SEE DOOR SCHEDULE AND FRAME ELEVATION FOR ADDITIONAL INFORMATION	W1

KEY TO WINDOW SCHEDULE:

GLAZING:
GL-1: 1/4" ANNEALED CLEAR FLOAT GLASS, TEMPERED

FRAME:
HM-1: SDI LEVEL 1, 18GA WELDED HOLLOW METAL

WINDOW SCHEDULE | D2

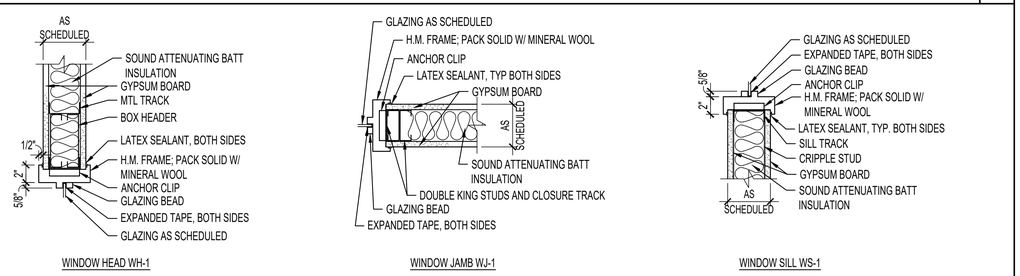

SCALE: 1-1/2" = 1'-0"

WINDOW DETAILS | D1

ROOM NO.	ROOM NAME	FLOOR	BASE	WALLS N	WALLS S	WALLS E	WALLS W	CASEWORK CAB	CASEWORK TOP	CEILING	HEIGHT	REMARKS	ROOM NUMBER
BASEMENT													
001	STORAGE	ETR	ETR	PT-1	PT-1	PT-1	PT-1	---	---	ETR	ETR	1,6	001
002	UTILITY	ETR	VWB-1	PT-1	PT-1	PT-1	PT-1	---	---	OPEN	---	1,6	002
003	LOUNGE	CPT-1	WB-1	PT-1	PT-1	PT-1	PT-1	---	---	APC-1	8'-7"±	2	003
004	CORRIDOR	CPT-1	WB-1	PT-1	PT-1	PT-1	PT-1	---	---	APC-1	8'-7"±	2,6	004
005	UTILITY	ETR	ETR	PT-1	PT-1	PT-1	PT-1	---	---	ETR	ETR	1,6	005
006	CONFERENCE	CPT-1	WB-1	PT-1	PT-1	PT-1	PT-1	PLAM-3	SS-5	APC-1	8'-7"±	2	006
007	RESTROOM	CFT-1	CWB-1	PT-2	CWT-1/PT-2	CWT-1/PT-2	CWT-1/PT-2	PLAM-1	SS-1	APC-1	8'-7"±	2,4,5,7,8	007
008	RESTROOM	CFT-1	CWB-1	PT-2	CWT-1/PT-2	CWT-1/PT-2	CWT-1/PT-2	PLAM-1	SS-1	APC-1	8'-7"±	2,4,5,7,8	008
009	SECURE STORAGE	FC-1	FC-1	PT-1	PT-1	PT-1	PT-1	---	---	ETR	ETR	1,3,6	009
010	SECURE STORAGE	FC-1	FC-1	PT-1	PT-1	PT-1	PT-1	---	---	ETR	ETR	1	010
011	WORK SPACE	FC-1	FC-1	PT-1	PT-1	PT-1	PT-1	---	---	ETR	ETR	3,6	011
012	CORRIDOR	CPT-1	WB-1	PT-1	PT-1	PT-1	PT-1	---	---	APC-1	8'-7"±	2,6	012
EL-01-00	ELEVATOR	ETR	ETR	ETR	ETR	ETR	ETR	---	---	ETR	ETR		EL-01-00
ST-01-00	STAIR	ETR	ETR	ETR	ETR	ETR	ETR	---	---	ETR	ETR		ST-01-00
ST-02-00	STAIR	ETR	ETR	ETR	ETR	ETR	ETR	---	---	ETR	ETR		ST-02-00
FIRST FLOOR													
101	RESTROOM	CFT-1	CWB-1	PT-2	CWT-1/PT-2	CWT-1/PT-2	CWT-1/PT-2	PLAM-1	SS-1	APC-1	8'-10"±	2,4,5,7,8	101
102	RESTROOM	CFT-1	CWB-1	PT-2	CWT-1/PT-2	CWT-1/PT-2	CWT-1/PT-2	PLAM-1	SS-1	APC-1	8'-10"±	2,4,5,7,8	102
SECOND FLOOR													
201	OFFICE	CPT-1	WB-1	PT-1	PT-1	PT-1	PT-1	---	---	APC-1	8'-10"±	2	201
202	OFFICE	CPT-1	WB-1	PT-1	PT-1	PT-1	PT-1	---	---	APC-1	8'-10"±	2	202
203	OFFICE	CPT-1	WB-1	PT-1	PT-1	PT-1	PT-1	---	---	APC-1	8'-10"±	2	203
204	OFFICE	CPT-1	WB-1	PT-1	PT-1	PT-1	PT-1	---	---	APC-1	8'-10"±	2	204
205	IT	CPT-1	WB-1	PT-1	PT-1	PT-1	PT-1	---	---	APC-1	8'-10"±	2	205
206	OPEN OFFICE	CPT-1	WB-1	PT-1	PT-1	PT-1	PT-1	---	---	ETR / APC-1	8'-10"±	2	206
207	CORRIDOR	CPT-1	WB-1	PT-1	PT-1	PT-1	PT-1	---	---	APC-1	8'-10"±	2	207
208	CORRIDOR	CPT-1	WB-1	PT-1	PT-1	PT-1	PT-1	---	---	APC-1	8'-10"±	2	208
209	OFFICE	CPT-1	WB-1	PT-1	PT-1	PT-1	PT-1	---	---	APC-1	8'-10"±	2	209
210	OFFICE	CPT-1	WB-1	PT-1	PT-1	PT-1	PT-1	---	---	APC-1	8'-10"±	2	210
211	CUSTODIAL	VCT-1	VWB-1	PT-1	PT-1	PT-1	PT-1	---	---	APC-1	8'-10"±	1,2,6	211
212	RESTROOM	CFT-1	CWB-1	PT-2	CWT-1/PT-2	CWT-1/PT-2	CWT-1/PT-2	PLAM-1	SS-1	APC-1	8'-10"±	2,4,5,7,8	212
213	RESTROOM	CFT-1	CWB-1	PT-2	CWT-1/PT-2	CWT-1/PT-2	CWT-1/PT-2	PLAM-1	SS-1	APC-1	8'-10"±	2,4,5,7,8	213
214	BREAK	LVT-1	WB-1	PT-3	PT-3	PT-3	PT-3	PLAM-2	SS-4	APC-1	8'-10"±	2,6	214
215	PRINT AREA	CPT-1	WB-1	PT-1	PT-1	PT-1	PT-1	---	---	APC-1	8'-10"±	2	215
216	OPEN OFFICE	CPT-1	WB-1	PT-1	PT-1	PT-1	PT-1	---	---	APC-1	8'-10"±	2	216
217	IT OFFICE	CPT-1	WB-1	PT-1	PT-1	PT-1	PT-1	---	---	APC-1	8'-10"±	2	217
218	STORAGE	CPT-1	WB-1	PT-1	PT-1	PT-1	PT-1	---	---	ETR	ETR	2	218
219	OFFICE	CPT-1	WB-1	PT-1	PT-1	PT-1	PT-1	---	---	APC-1	8'-10"±	2	219
220	OFFICE	CPT-1	WB-1	PT-1	PT-1	PT-1	PT-1	---	---	APC-1	8'-10"±	2	220
221	OFFICE	CPT-1	WB-1	PT-1	PT-1	PT-1	PT-1	---	---	APC-1	8'-10"±	2	221
EL-01-02	ELEVATOR	ETR	ETR	ETR	ETR	ETR	ETR	---	---	ETR	ETR		EL-01-02
ST-01-02	STAIR	ETR	ETR	ETR	ETR	ETR	ETR	---	---	ETR	ETR		ST-01-02
ST-02-02	STAIR	ETR	ETR	ETR	ETR	ETR	ETR	---	---	ETR	ETR		ST-02-02

KEY TO FINISH SCHEDULE

CARPET FLOORING:

CPT-1: MANUFACTURER - MOHAWK GROUP
TYPE - 12x36 TILE
STYLE - GENTLE GROUND GT364
COLOR - 739 NECTAR
INSTALL- BRICK ASHLAR

WALL BASE:

WB-1: WOOD MOLDING WALL BASE
MANUFACTURER - MOLDINGS ONE
TYPE - POPLAR WOOD
PROFILE - OGEE, 2093
SIZE - 3/4" X 4"
FINISH- FACTORY PRIMED, PAINTED

CWB-1: CERAMIC TILE WALL BASE
MANUFACTURER - ARIZONA TILE
PROFILE - TRAPEZ
COLOR- CREAM
GROUT- OYSTER GRAY
INSTALL- FLAT BOND

VWB-1: VINYL WALL BASE
MANUFACTURER - JOHNSONITE
TYPE - VINYL
PROFILE - COVE
SIZE - 4"
COLOR- PEBBLE 32

VWB-2: VINYL WALL BASE
MANUFACTURER - JOHNSONITE
TYPE - VINYL
PROFILE - COVE
SIZE - 4"
COLOR- BLACK

CERAMIC WALL TILE:

CWT-1: MANUFACTURER - ARIZONA TILE
STYLE - TRAPEZ
COLOR - CREAM
GROUT- OYSTER GRAY
INSTALL- AS SHOWN, HEXAGON

PAINTS & PAINT SYSTEM

PAINT MANUFACTURER - SHERWIN WILLIAMS
PT-1: FINISH - EGGSHELL
COLOR - TBD

PT-2: FINISH - EGGSHELL
COLOR - TBD

PT-3: FINISH - EGGSHELL
COLOR - TBD

PT-4: FINISH - SEMI-GLOSS
COLOR - TBD

PT-5: FINISH - SEMI-GLOSS
COLOR - TBD

ACOUSTIC PANEL CEILING

APC-1: MANUFACTURER - ARMSTRONG
TYPE - ULTIMA HIGH NRC 2X2 1941
PROFILE - BEVELED TEGULAR
GRID - PRELUDE
COLOR - WHITE

CERAMIC FLOOR TILE:

CFT-1: MANUFACTURER - DALTILE
SIZE - 12x24
STYLE - COHESION
COLOR - BEIGE CO22

LUXURY VINYL TILE:

LVT-1: MANUFACTURER - ARMSTRONG
TYPE - AMERICAN CHARM, U7125
STYLE - OSCFORD WHITE OAK
COLOR - NATURAL HARMONY
INSTALL- 1/3 STAGGERED

FLOOR COATING:

FC-1: MANUFACTURER - SHERWIN-WILLIAMS
TYPE - RESUFLOR AQUA EPOXY
STYLE - INTEGRATED WALL BASE
COLOR - TBD

VINYL COMPOSITION TILE:

VCT-1: MANUFACTURER -"ARMSTRONG"
TYPE - PREMIUM EXCELON 52143
STYLE - STONETEX
COLOR - SANDSTONE TAN

TRANSITION STRIPS

MANUFACTURER - SCHLUTER OR ROPPE
STYLE - TBD (SEE DOOR SILL CONDITIONS)

CERAMIC TILE ACCESSORIES

MANUFACTURER - SCHLUTER
STYLE - TBD (SEE NOTES FOR CONDITIONS)

PLASTIC LAMINATE

PLM-1: MANUFACTURER - FORMICA
STYLE - LAMINATE (VERTICAL)
COLOR - SOLENNE 8301

PLM-2: MANUFACTURER - FORMICA
STYLE - LAMINATE (VERTICAL)
COLOR - NILE VELVET 15515

PLM-3: MANUFACTURER - WILSONART"
STYLE - LAMINATE (VERTICAL)
COLOR - JUBILEE OAK 8242

PLM-4: MANUFACTURER - FORMICA
STYLE - LAMINATE (VERTICAL)
COLOR - BLACK 1595

SOLID SURFACING MATERIAL

SS-1: MANUFACTURER - FORMICA EVERFORM
STYLE - VANITY
COLOR - ARCTIC 102
THICKNESS - 1/2-INCH

SS-2: MANUFACTURER - DUPONT CORIAN
STYLE - BACKSPLASH
COLOR - NATURAL GRAY
THICKNESS - 1/2-INCH

SS-3: MANUFACTURER -"DUPONT"
STYLE - THRESHOLD W/ CHAMFERED EDGES
COLOR - TBD
THICKNESS - 1/2-INCH
SIZE - MATCH WALL THICKNESS AND DOOR WIDTH

SS-4: MANUFACTURER - DUPONT CORIAN
STYLE - COUNTER TOP
COLOR - NATURAL GRAY
THICKNESS - 1/2-INCH

SS-5: MANUFACTURER - DUPONT CORIAN
STYLE - COUNTER TOP
COLOR - CAMEO WHITE
THICKNESS - 1/2-INCH

REMARKS
1. REMOVE AND SALVAGE ALL ACCESSORIES AND REINSTALL AFTER FINISHES ARE INSTALLED.
2. MATCH EXISTING CEILING HEIGHT, VIF.
3. PROVIDE AND INSTALL NECESSARY SUPPORT, GRID, AND ACCESSORIES TO ACCOMMODATE NEW LAYOUT TO RETAIN EXISTING APC. CUT TILES AS NECESSARY TO FIT NEW GRID LAYOUT.
4. COORDINATE WITH ELEVATIONS.
5. PROVIDE SOLID SURFACING THRESHOLD SS-3.
6. PROVIDE ALUMINUM EDGING / TRANSITION STRIP. COORDINATE WITH FINISHED FLOORING.
7. PROVIDE SS COVE AT WALL-FLOOR TRANSITION, SCHLUTER DILEX-EHK
8. PROVIDE SS FINISHING EDGE AT TOP OF WAINSCOT AND WALL BASE TILE, SCHLUTER JOLLY.

ROOM FINISH SCHEDULE | A1

FARMERS & MERCHANTS BANK
25 WESTMINSTER PIKE
REISTERTOWN, MARYLAND, 21136
INTERIOR ALTERATION

ARCHITECTURAL REGISTRATION BOARD
8586
TIMOTHY H. SANDERS
STATE OF MARYLAND

I CERTIFY THAT THESE DOCUMENTS WERE PREPARED OR APPROVED BY ME AND THAT I AM A DULY LICENSED ARCHITECT UNDER THE LAWS OF THE STATE OF MARYLAND.

LICENSE NO.: 8586

EXP. DATE: 21 MAY 2027

THESE DRAWINGS ARE NOT PERMITTED TO BE COPIED OR REPRODUCED, EITHER WHOLLY OR PARTIALLY, UNLESS WRITTEN PERMISSION IS FIRST OBTAINED FROM SANDERS DESIGNS, P.A.

SANDERS | DESIGNS
ARCHITECTS PLANNERS
MAILBOX@SANDERSDESIGNS.COM
WWW.SANDERSDESIGNS.COM T: (410) 560 2624
9727 GREENSIDE DRIVE, SUITE 202, COCKEYSVILLE, MARYLAND 21030

No.	Date	Revision

Project No.: 26.102
Date: 29 SEPTEMBER 2026
Scale: AS NOTED
Edition: PERMIT SET
Drawing Name: SCHEDULES & DETAILS
Drawing Number: A601

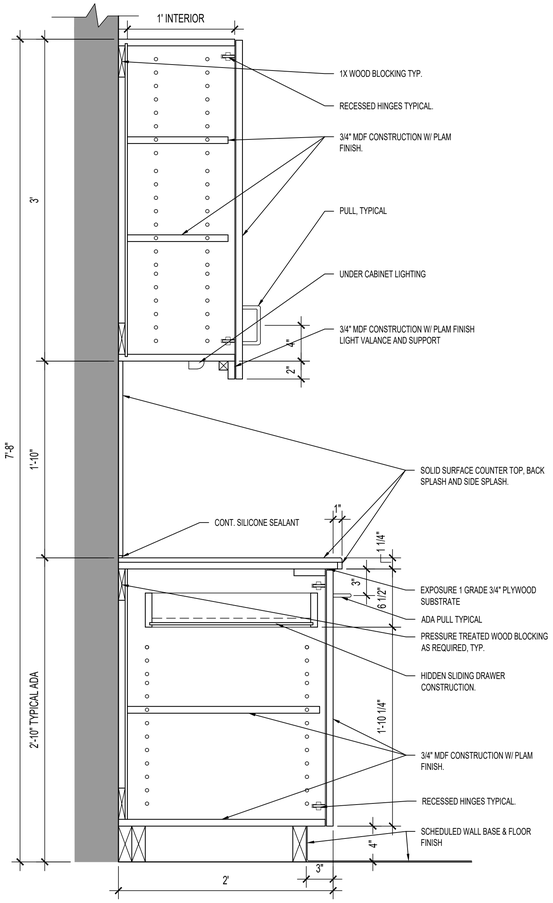

SCALE: 1-1/2" = 1'-0"

BASE AND WALL CAB DETAIL | F3

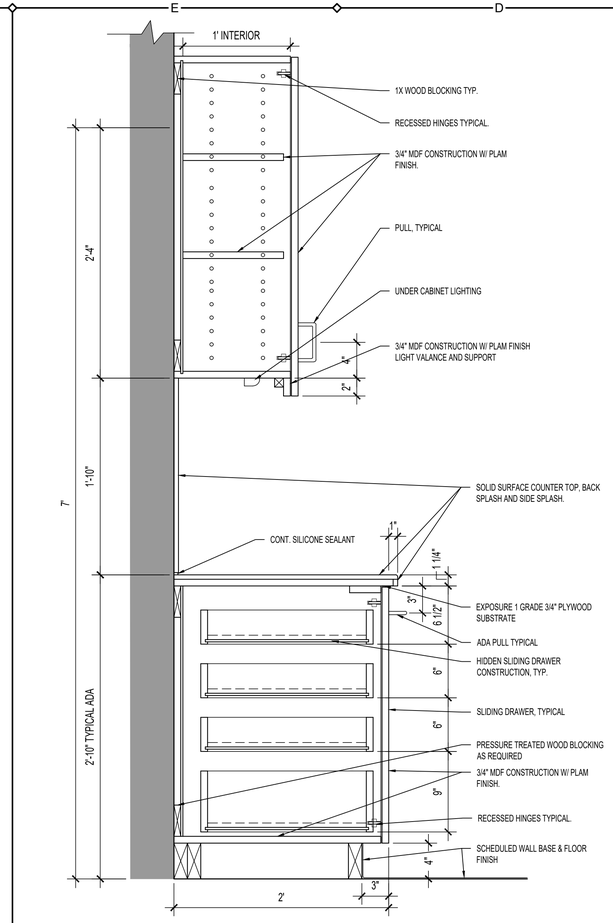

SCALE: 1-1/2" = 1'-0"

BASE AND WALL CAB DETAIL | D3

RESTROOM ACCESSORY SCHEDULE

MARK	QUANTITY	ITEM	MANUFACTURER	MODEL	MOUNTING	REMARKS
1	6	MIRROR	BOBRICK	B-105	SEE ELEVATIONS	
2	6	TOILET TISSUE DISPENSER	BOBRICK	B-6867	SEE ELEVATIONS	DOUBLE STANDARD ROLL
3	6	WASTE RECEPTACLE	BOBRICK	B-2300	FLOOR	W/ DOME TOP
4	6	GRAB BAR	BOBRICK	B-6806.99x36	SEE ELEVATIONS	PEENED GRIP
5	6	GRAB BAR	BOBRICK	B-6806.99x42	SEE ELEVATIONS	PEENED GRIP
6	6	PAPER TOWEL DISPENSER	BOBRICK	B-4262	SEE ELEVATIONS	SURFACE MOUNTED
7	6	SEAT COVER DISPENSER	BOBRICK	B-4221	SEE ELEVATIONS	SURFACE MOUNTED
8	12	ROBE / COAT HOOK	BOBRICK	B-76717	SEE ELEVATIONS	SURFACE MOUNTED
9	1	WASTE RECEPTACLE	RUBBERMAID	H-1859BLU	CABINET	COORDINATE W/ MILLWORK
10	1	WASTE RECEPTACLE	RUBBERMAID	S-13527BL	CABINET	COORDINATE W/ MILLWORK

GENERAL NOTES:
1) ALL QUANTITIES AND LOCATIONS TO BE VERIFIED PRIOR TO ORDERING AND INSTALLATION.
2) SEE PLUMBING DRAWINGS FOR FLOOR DRAIN LOCATIONS.

RESTROOM ACCESSORY SCHEDULE | A5

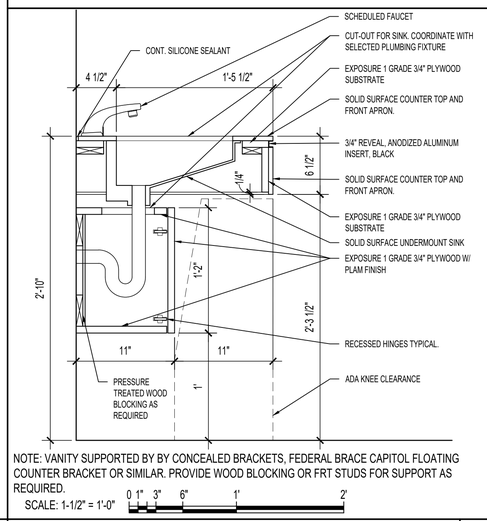

NOTE: VANITY SUPPORTED BY BY CONCEALED BRACKETS, FEDERAL BRACE CAPITOL FLOATING COUNTER BRACKET OR SIMILAR. PROVIDE WOOD BLOCKING OR FRT STUDS FOR SUPPORT AS REQUIRED.

SCALE: 1-1/2" = 1'-0"

VANITY DETAIL | B3

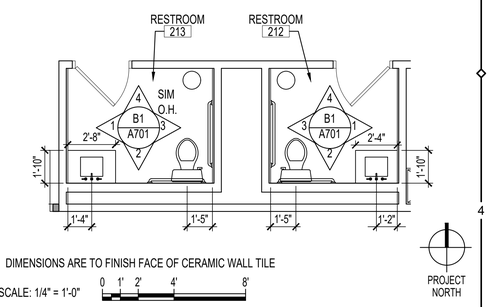

DIMENSIONS ARE TO FINISH FACE OF CERAMIC WALL TILE

SCALE: 1/4" = 1'-0"

ENLARGED RESTROOM PLAN | A4

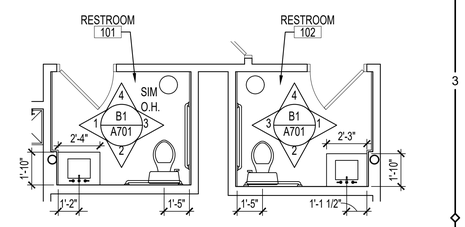

DIMENSIONS ARE TO FINISH FACE OF CERAMIC WALL TILE

SCALE: 1/4" = 1'-0"

ENLARGED RESTROOM PLAN | A2

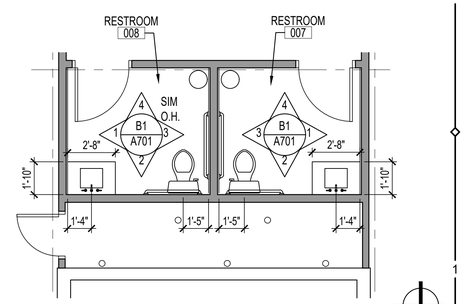

DIMENSIONS ARE TO FINISH FACE OF CERAMIC WALL TILE

SCALE: 1/4" = 1'-0"

ENLARGED RESTROOM PLAN | A1

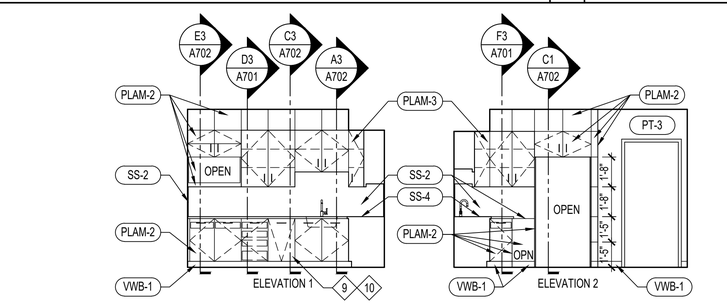

SCALE: 1/4" = 1'-0"

KITCHENETTE INT ELEVATIONS | E2

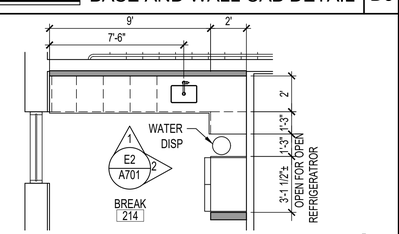

NOTES:
1. REFRIGERATOR AND WATER DISPENSER BY OWNER.
2. INSTALL SCHLUTER QUADEC EDGE PROFILE @ BACKSPLASH TO PLAM FACED WD PANEL TRANSITION AT WATER DISP. 3/4" HT, COLOR ALUM FINISH.

SCALE: 1/4" = 1'-0"

ENLARGED KITCHENETTE PLAN | D2

SCALE: 1/4" = 1'-0"

RESTROOM ELEVATIONS | B1

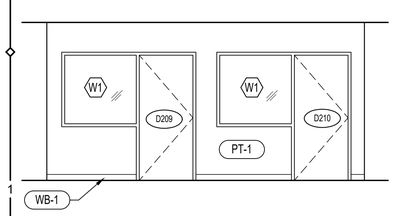

SCALE: 1/4" = 1'-0"

OFFICE INT ELEVATIONS | G1

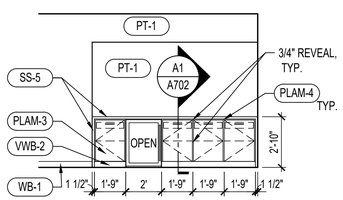

NOTES:1. RETURN SS-5 ON INSIDE OF VERTICAL LOCATIONS
2. REFRIGERATOR BY OWNER

SCALE: 1/4" = 1'-0"

CONFERENCE INT ELEVATIONS | E1

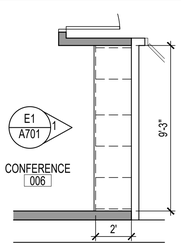

SCALE: 1/4" = 1'-0"

ENLARGED CONFERENCE PLAN | D1

FARMERS & MERCHANTS BANK
25 WESTMINSTER PIKE
REISTERTOWN, MARYLAND, 21136
INTERIOR ALTERATION

ARCHITECTURAL REGISTRATION BOARD
8586
TIMOTHY H. SANDERS
STATE OF MARYLAND

I CERTIFY THAT THESE DOCUMENTS WERE PREPARED OR APPROVED BY ME AND THAT I AM A DULY LICENSED ARCHITECT UNDER THE LAWS OF THE STATE OF MARYLAND.

LICENSE NO.: 8586

EXP. DATE: 21 MAY 2027

THESE DRAWINGS ARE NOT PERMITTED TO BE COPIED OR REPRODUCED, EITHER WHOLLY OR PARTIALLY, UNLESS WRITTEN PERMISSION IS FIRST OBTAINED FROM SANDERS DESIGNS, P.A.

SANDERS | DESIGNS
ARCHITECTS PLANNERS
MAILBOX@SANDERSDESIGNS.COM
WWW.SANDERSDESIGNS.COM T: (410) 560 2624
9727 GREENSIDE DRIVE, SUITE 202, COCKEYSVILLE, MARYLAND 21030

No.	Date	Revision

Project No.: 26.102
Date: 29 SEPTEMBER 2026
Scale: AS NOTED
Edition: PERMIT SET
Drawing Name: ENLARGED PLANS & MILLWORK DETAILS
Drawing Number: A701

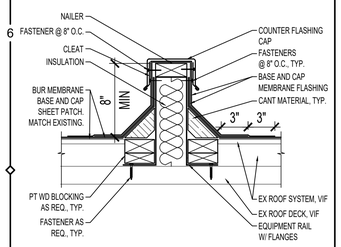

EQUIPMENT RAIL DETAIL | G5

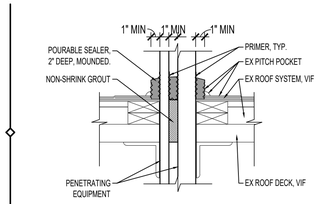

PITCH POCKET DETAIL | G4

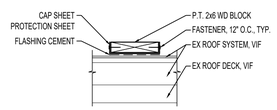

EQUIPMENT SUPPORT DETAIL | G3

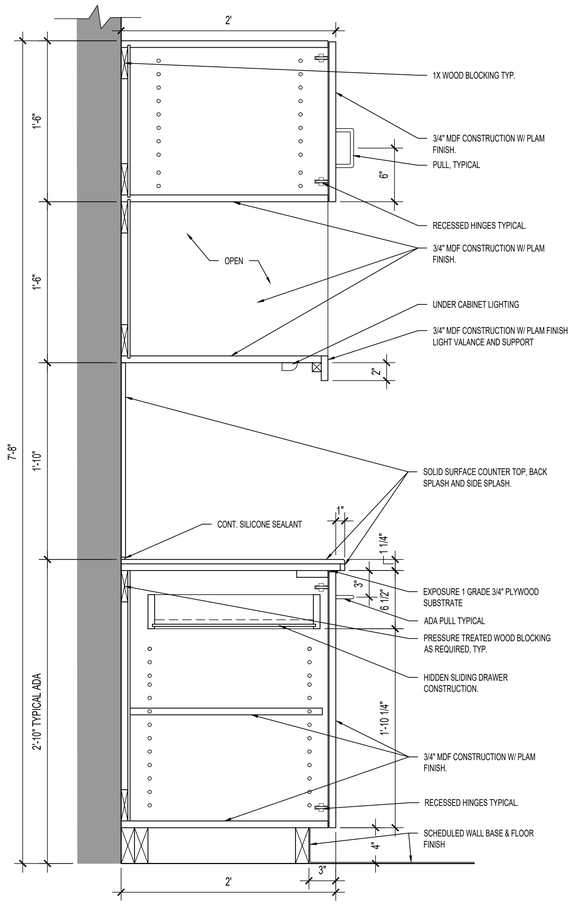

SCALE: 1-1/2" = 1'-0" 0 1" 3" 6" 1' 2'

BASE AND WALL CAB DETAIL | E3

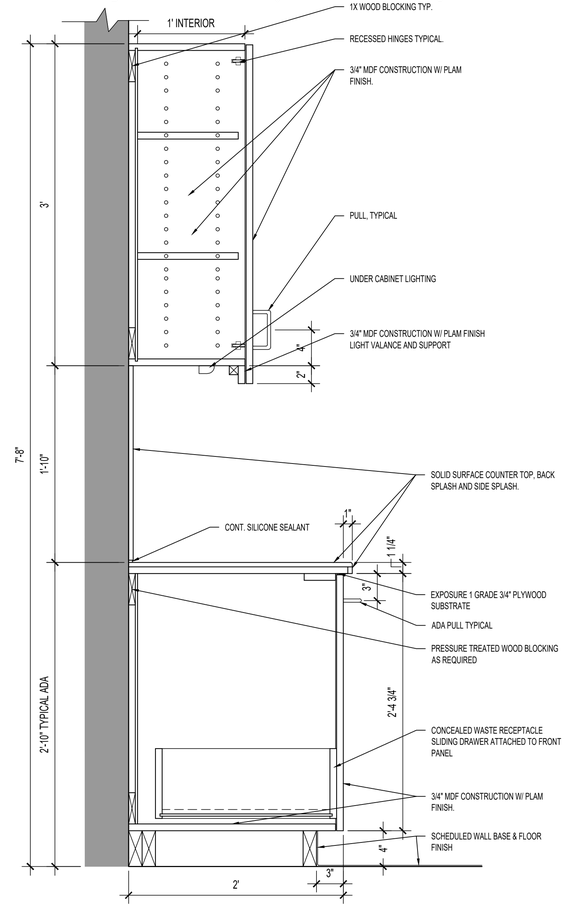

SCALE: 1-1/2" = 1'-0" 0 1" 3" 6" 1' 2'

BASE AND WALL CAB DETAIL | C3

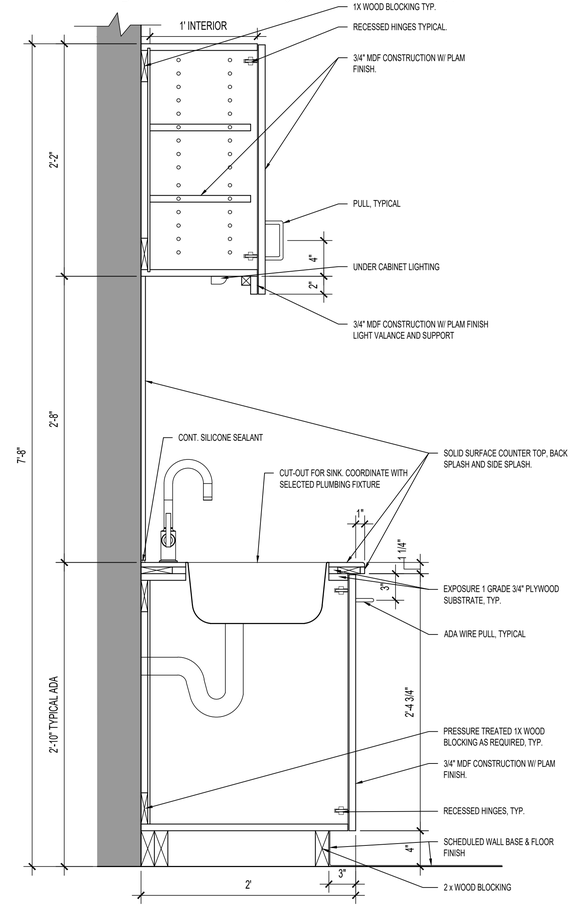

SCALE: 1-1/2" = 1'-0" 0 1" 3" 6" 1' 2'

BASE AND WALL CAB DETAIL | A3

LOCATION			SIGN TYPE	PICTOGRAM SYMBOLS	NUMBER	TEXT	ARROW	BRAILE
DOOR NO.	ROOM NAME	FLOOR						
D007	RESTROOM	B	A.01	MALE / FEMALE / ACCESSIBILITY	---	RESTROOM	---	RESTROOM
D008	RESTROOM	B	A.01	MALE / FEMALE / ACCESSIBILITY	---	RESTROOM	---	RESTROOM
D101	RESTROOM	1	A.01	MALE / FEMALE / ACCESSIBILITY	---	RESTROOM	---	RESTROOM
D102	RESTROOM	1	A.01	MALE / FEMALE / ACCESSIBILITY	---	RESTROOM	---	RESTROOM
D212	RESTROOM	2	B.01	FEMALE	---	WOMEN	---	WOMEN
D212	RESTROOM	2	A.02	MALE / FEMALE / ACCESSIBILITY	---	RESTROOM	RIGHT	RESTROOM
D213	RESTROOM	2	A.01	MALE / FEMALE / ACCESSIBILITY	---	RESTROOM	---	RESTROOM

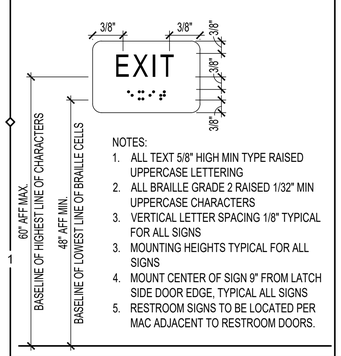

NOTES:
1. ALL TEXT 5/8" HIGH MIN TYPE RAISED UPPERCASE LETTERING
2. ALL BRAILLE GRADE 2 RAISED 1/32" MIN UPPERCASE CHARACTERS
3. VERTICAL LETTER SPACING 1/8" TYPICAL FOR ALL SIGNS
3. MOUNTING HEIGHTS TYPICAL FOR ALL SIGNS
4. MOUNT CENTER OF SIGN 9" FROM LATCH SIDE DOOR EDGE, TYPICAL ALL SIGNS
5. RESTROOM SIGNS TO BE LOCATED PER MAC ADJACENT TO RESTROOM DOORS.

SIGN MOUNTING DETAIL | G1

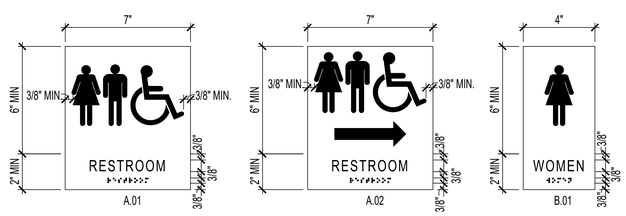

SCALE: 6" = 1'-0" 0 1/2" 1" 2" 3" 6"

SIGN SCHEDULE | E1

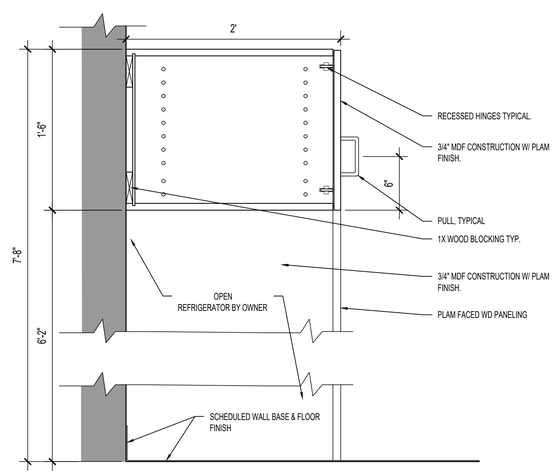

SCALE: 1-1/2" = 1'-0" 0 1" 3" 6" 1' 2'

WALL CAB DETAIL | C1

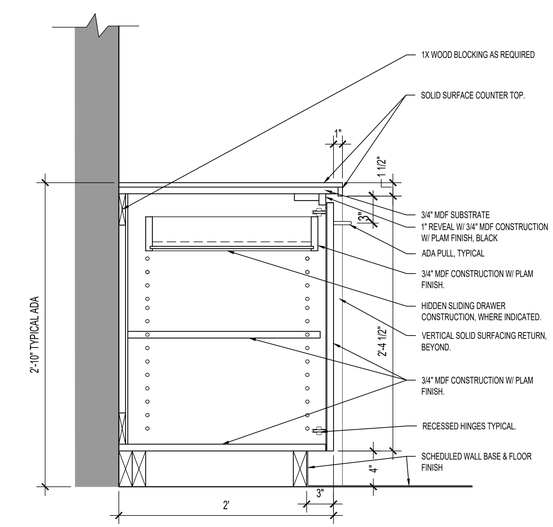

SCALE: 1-1/2" = 1'-0" 0 1" 3" 6" 1' 2'

CONF. BASE CAB DETAIL | A1

FARMERS & MERCHANTS BANK
25 WESTMINSTER PIKE
REISTERTOWN, MARYLAND, 21136
INTERIOR ALTERATION

ARCHITECTURAL REGISTRATION BOARD 8586 TIMOTHY H. SANDERS STATE OF MARYLAND

I CERTIFY THAT THESE DOCUMENTS WERE PREPARED OR APPROVED BY ME AND THAT I AM A DULY LICENSED ARCHITECT UNDER THE LAWS OF THE STATE OF MARYLAND.

LICENSE NO.: 8586

EXP. DATE: 21 MAY 2027

THESE DRAWINGS ARE NOT PERMITTED TO BE COPIED OR REPRODUCED, EITHER WHOLLY OR PARTIALLY, UNLESS WRITTEN PERMISSION IS FIRST OBTAINED FROM SANDERS DESIGNS, P.A.

SANDERS | DESIGNS
ARCHITECTS PLANNERS
MAILBOX@SANDERSDESIGNS.COM
WWW.SANDERSDESIGNS.COM T: (410) 560 2624
9727 GREENSIDE DRIVE, SUITE 202, COCKEYSVILLE, MARYLAND 21030

No.	Date	Revision

Project No.: 26.102
Date: 29 SEPTEMBER 2026
Scale: 1-1/2" = 1'-0"
Edition: PERMIT SET
Drawing Name: MILLWORK DETAILS
Drawing Number: A702

DIVISION 06 WOOD, PLASTICS, AND COMPOSITES

06 1000 ROUGH CARPENTRY
1. DIMENSIONAL LUMBER FRAMING
   A. NON-LOAD-BEARING INTERIOR PARTITIONS BY GRADE: CONSTRUCTION OR NO. 2
      a. MAXIMUM MOISTURE CONTENT: 15 PERCENT
   B. PRESERVATIVE TREATMENT BY PRESSURE PROCESS: AWPA U1; USE CATEGORY UC2.
      a. CHEMICALS: ACCEPTABLE TO AHJ AND CONTAINING NO ARSENIC OR CHROMIUM
      b. MAXIMUM MOISTURE CONTENT: 19 PERCENT
      c. LOCATIONS: WHERE INDICATED ON DRAWINGS AND THE FOLLOWING:
         1. WOOD CANTS, NAILERS, CURBS, EQUIPMENT SUPPORTS, AND SIMILAR ITEMS IN CONNECTION WITH ROOFING AND FLASHING.
         2. WOOD FRAMING AND FURRING IN CONTACT WITH MASONRY OR CONCRETE.
         3. WOOD FLOOR PLATES INSTALLED OVER CONCRETE SLABS-ON-GRADE.
   C. FIRE-RETARDANT TREATMENT BY PRESSURE PROCESS: PRODUCTS WITH A FLAME SPREAD INDEX OF 25 OR LESS PER ASTM E84, AND WITH NO EVIDENCE OF SIGNIFICANT PROGRESSIVE COMBUSTION WHEN THE TEST IS EXTENDED 20 MINUTES.
      a. TREATMENT SHALL NOT PROMOTE CORROSION OF METAL FASTENERS
      b. INTERIOR TYPE A: MOISTURE CONTENT OF 28 MAX PERCENT PER ASTM D3201 / D3201M
      c. MAXIMUM MOISTURE CONTENT: 19 PERCENT

06 4119 PLASTIC-LAMINATE-CLAD ARCHITECTURAL CABINETS
1. PLASTIC-LAMINATE-CLAD ARCHITECTURAL CABINETS
   A. GRADE: CUSTOM
   B. TYPE OF CONSTRUCTION: FACE FRAME
      a. COORDINATE REVEAL LOCATIONS AND SIZE WITH DRAWINGS.
   C. DOOR AND DRAWER-FRONT STYLE: FLUSH OR REVEAL OVERLAY.
      a. COORDINATE REVEAL LOCATIONS AND SIZE WITH DRAWINGS.
   D. PLASTIC LAMINATE: HIGH-PRESSURE DECORATIVE LAMINATE, COMPLY WITH NEMA LD 3, GRADES AS INDICATED.
   E. LAMINATE CLADDING FOR EXPOSED SURFACES
      a. HORIZONTAL SURFACES: GRADE HGS
      b. POSTFORMED SURFACES: GRADE HGP
      c. VERTICAL SURFACES: GRADE HGS
      d. EDGES: GRADE HGS
      e DRAWER FRONTS BEHIND DOORS: GRADE HGS
      f. PATTERN DIRECTION: VERTICAL FOR DOORS AND FIXED PANELS
   F. MATERIALS FOR SEMIEXPOSED SURFACES
      a. SURFACES OTHER THAN DRAWER BODIES: THERMALLY FUSED LAMINATE PANELS
      b. EDGES OF THERMALLY FUSED LAMINATE PANELS: PVC OR POLYESTER EDGE BANDING
      c. DRAWER SIDES AND BACKS: THERMALLY FUSED LAMINATE PANELS WITH PVC OR POLYESTER EDGE BANDING
      d. DRAWER BOTTOMS: THERMALLY FUSED LAMINATE PANELS
   G. CONCEALED BACKS OF PANELS WITH EXPOSED PLASTIC-LAMINATE SURFACES: HIGH-PRESSURE DECORATIVE LAMINATE, NEMA LD 3, GRADE BKL
   H. DRAWER CONSTRUCTION: FABRICATE WITH EXPOSED FRONTS FASTENED TO SUBFRONT WITH MOUNTING SCREWS FROM INTERIOR OF BODY.
      a. JOIN SUBFRONTS, BACKS, AND SIDES WITH GLUED DOVETAIL JOINTS
   I. COLOR: AS INDICATED ON THE DRAWINGS
      a. GRAIN DIRECTION (WHERE APPLICABLE): VERTICAL
2. WOOD MATERIALS
   A. COMPOSITE WOOD: MEDIUM DENSITY FIBERBOARD (MDF), ANSI A208.2 , GRADE 130
      a. THICKNESS: 3/4 INCH
      b. MOISTURE CONTENT: 5-10 PERCENT
   B. THERMALLY FUSED LAMINATE PANELS: MDF FINISHED WITH THERMALLY FUSED, MELAMINE-IMPREGNATED DECORATIVE PAPER AND COMPLYING WITH NEMA LD 3, GRAVE VGL.
      a. THICKNESS: 3/4 INCH
   C. PLYWOOD: CLASSIFICATION EXPOSURE 1
      a. THICKNESS: 3/4 INCH
      b. VENEER GRADE C
3. HARDWARE
   A. CONCEALED HINGES (EUROPEAN TYPE): ANSI/BHMA A156.9, B01602, 135 DEGREES OF OPENING.
   B. WIRE PULLS: BACK MOUNTED, SOLID METAL, 5 INCHES LONG, 2-1/2 INCHES DEEP, AND 5/16 INCH IN DIAMETER
      a. FINISH: TO BE SELECTED FROM THE MANUFACTURER'S FULL LINE.
   C. CATCHES: MAGNETIC CATCHES, ANSI/BHMA A156.9, B03141
   D. SHELF RESTS: ANSI/BHMA A156.9, B04013; METAL.
   E. DRAWER SLIDES: ASNI/BHMA 156.9
      a. HEAVY-DUTY (GRADE 1HD-100 AND GRADE 1HD-200): SIDE MOUNT.
      b. FULL EXTENSION
      c. MATERIAL: ALUMINUM
      d. 100 LB LOAD CAPACITY
   F. DOOR AND DRAWER SILENCERS: ANSI/BHMA A156.16, L03011
4. MISCELLANEOUS MATERIALS
   A. FURRING, BLOCKING, SHIMS, AND HANGING STRIPS: SOFTWOOD OR HARDWOOD LUMBER, KILN-DRIED TO LESS THAN 15 PERCENT MOISTURE CONTENT
      a. PRESERVATIVE-TREATED WHERE INDICATED.
   B. ADHESIVES FOR BONDING PLASTIC LAMINATE: UNPIGMENTED CONTACT CEMENT
5. INSTALLATION
   A. INSTALL CABINETS LEVEL, PLUMB, TRUE IN LINE, AND WITHOUT DISTORTION. SHIM WITH CONCEALED SHIMS.
      a. LEVEL AND PLUMB TOLERANCE: 1/8-INCH IN 96 INCHES
   B. ANCHOR CABINETS TO BLOCKING WITH WAFER-HEAD CABINET INSTALLATION SCREWS.

06 4219 PLASTIC-LAMINATE-FACED WOOD PANELING
1. PLASTIC-LAMINATE-FACED WOOD PANELING
   A. GRADE: CUSTOM
   B. PLASTIC LAMINATE: HIGH-PRESSURE DECORATIVE LAMINATE, COMPLY WITH NEMA LD 3
      a. FACES: GRADE HGF
      b. BACKS: GRADE VGF
      C. EXPOSED EDGES: SAME AS FACES
   C. COLOR: AS INDICATED ON THE DRAWINGS
      a. GRAIN DIRECTION (WHERE APPLICABLE): VERTICAL
   D. PANEL CORE: FIRE-RETARDANT MDF, ANSI A208.2, GRADE 130
      a. THICKNESS: 3/4 INCH
      b. MOISTURE CONTENT: 5-10 PERCENT
   E. EXPOSED PANEL EDGES: PLASTIC LAMINATE MATCHING FACE.
   F. ADHESIVES FOR BONDING PLASTIC LAMINATE: UNPIGMENTED CONTACT CEMENT
      a. MATCH FLAME SPREAD INDEX AND SMOKE DEVELOPED INDEX OF WHOLE PANEL
   B. FLAME SPREAD INDEX 75 OR LESS
   C. SMOKE DEVELOPED INDEX 450 OR LESS
2. INSTALLATION
   A. INSTALL PANELING LEVEL, PLUMB, TRUE IN LINE, AND WITHOUT DISTORTION. SHIM WITH CONCEALED SHIMS.
      a. LEVEL AND PLUMB TOLERANCE: 1/8-INCH IN 96 INCHES
   B. ANCHOR PANELS WITH CONCEALED ANCHORS OR ADHESIVES AS RECOMMENDED BY MANUFACTURER.
      a. ALL ADHESIVES TO BE ZERO VOC TYPE.

DIVISION 07 THERMAL AND MOISTURE PROTECTION

07 2100 THERMAL INSULATION
1. MOLDED (EXPANDED) POLYSTYRENE FOAM-PLASTIC BOARD INSULATION (EPS)
   A. TYPE II, 15 PSI
   B. FLAME SPREAD INDEX 75 OR LESS
   C. SMOKE DEVELOPED INDEX 450 OR LESS
   D. INSTALL OVER ADHESIVELY ATTACHED, SPINDLE-TYPE ANCHORS, OR COMPATIBLE DIRECT ADHESIVE.
      a. ALL ADHESIVES TO COMPLY WITH SCAQMD RULE 1168 VOC LIMITS.
2. GLASS FIBER BLANKET UNFACED
   A. HIGH DENSITY
   B. TYPE I
   C. FLAME SPREAD INDEX 25 OR LESS
   D. SMOKE DEVELOPED INDEX 50 OR LESS

07 6200 SHEET METAL FLASHING AND TRIM
1. PERFORMANCE STANDARDS
   A. DESIGN PRESSURES AS INDICATED ON DRAWINGS
2. SHEET METALS
   A. ALUMINUM SHEET
      1. ASTM B209, SMOOTH SURFACE
      2. FINISH: 3-COAT 70% PVDF
      3. COLOR: TO BE SELECTED FROM THE MANUFACTURER'S FULL LINE.
   B. STAINLESS STEEL
      1. ASTM A240 TYPE 304, SMOOTH SURFACE
      2. ASTM A480 NO. 2D DULL, COLD ROLLED
   C. METALLIC-COATED STEEL
      1. GALVANIZED IN ACCORDANCE WITH ASTM A653, G90 DESIGNATION, SMOOTH SURFACE.
3. SEAMS
   A. NONMOVING SEAMS TO BE FLAT-LOCK TYPE. SOLDER OR SEAL WITH ELASTOMERIC SILICONE SEALANT.
4. SCHEDULE
   A. COUNTER FLASHING: STAINLESS STEEL 0.0188 INCH THICK
   B. OPENING FLASHING: ALUMINUM 0.032 INCH THICK
   C. EQUIPMENT SUPPORT FLASHING: GALVANIZED STEEL 0.028 INCH THICK

07 7200 ROOF ACCESSORIES
1. PERFORMANCE STANDARDS
   A. DELEGATED DESIGN: ENGAGE A QUALIFIED PROFESSIONAL ENGINEER TO DESIGN EQUIPMENT SUPPORTS TO COMPLY WITH WIND PERFORMANCE REQUIREMENTS.
2. EQUIPMENT SUPPORTS
   A. STRAIGHT SIDES WITH DECK MOUNTING FLANGE.
   B. SIZE: COORDINATE WITH EQUIPMENT
   C. LOAD CAPACITY: COORDINATE WITH EQUIPMENT
   D. MATERIAL: ZINC COATED SHEET STEEL
      1. THICKNESS: 0.064 INCH THICK
      2. HEIGHT: MINIMUM 8 INCHES ABOVE HIGHEST FINISHED ROOF MEMBRANE, VIF.
      3. INSULATION: FACTORY INSTALLED 1-1/2-INCH THICK GLASS-FIBER BOARD.
      4. LINER: SAME MATERIAL AS EQUIPMENT SUPPORT.
      5. NAILER: FACTORY INSTALLED WOOD NAILERS 3-1/2 INCHES WIDE ON TOP FLANGE
      6. METAL COUNTERFLASHING: COORDINATE WITH 076200 "SHEET METAL FLASHING AND TRIM."

DIVISION 08 OPENINGS

08 1213 HOLLOW METAL FRAMES
1. INTERIOR STANDARD-DUTY FRAMES (HM-1):
   A. ANSI / SDI A250.8 LEVEL 1
   B. FACE: UNCOATED SHEET STEEL, 0.042 INCH (18 GA) THICK MINIMUM
   C. CONSTRUCTION: FULL PROFILE WELDED
   D. FINISH: PRIMED
2. INTERIOR HEAVY-DUTY FRAMES (HM-2):
   A. ANSI / SDI A250.8 LEVEL 3
   B. FACE: UNCOATED SHEET STEEL, 0.053 INCH (16 GA) THICK MINIMUM
   C. CONSTRUCTION: FULL PROFILE WELDED
   D. FINISH: PRIMED
3. BORROWED LITES (HM-1):
   A. FACE: UNCOATED SHEET STEEL, 0.042 INCH (18 GA) THICK MINIMUM
   B. CONSTRUCTION: FULL PROFILE WELDED
3. JAMB ANCHORS: THREE PER FRAME
4. FLOOR ANCHORS: ALL LOCATIONS WHERE JAMB EXTENDS TO FLOOR.
5. FRAME INSULATION: SOLIDLY PACK MINERAL-FIBER INSULATION INSIDE FRAMES.

08 1416 FLUSH WOOD DOORS
1. PERFORMANCE STANDARDS
   A. ARCHITECTURAL WOODWORK STANDARDS
2. INTERIOR SOLID-CORE FIVE-PLY WOOD DOORS FOR OPAQUE FINISH:
   A. ANSI / WDMA I.S. 1A STANDARD DUTY
      a. ALL DOORS, UNLESS INDICATED OTHERWISE
   B. THICKNESS: 1-3/4 INCHES
   C. FACE: MEDIUM DENSITY OVERLAY (MDO)
      a. APPLY MDO TO STANDARD-THICKNESS, CLOSED-GRAIN, HARDWARE FACE VENEERS.
   D. TOP EDGE: ANY CLOSE-GRAIN HARDWOOD.
   E. CORE: ANSI A208.1 GRADE LD-2 PARTICLEBOARD
   F. BLOCKING: PROVIDE AS NEEDED FOR SCHEDULED HARDWARE.
3. INTERIOR SOLID-CORE FIVE-PLY WOOD DOORS FOR OPAQUE FINISH:
   A. ANSI / WDMA I.S. 1A HEAVY DUTY
      a. WHERE INDICATED ON DRAWINGS.
   B. THICKNESS: 1-3/4 INCHES
   C. FACE: MEDIUM DENSITY OVERLAY (MDO)
      a. APPLY MDO TO STANDARD-THICKNESS, CLOSED-GRAIN, HARDWARE FACE VENEERS.
   D. TOP EDGE: ANY CLOSE-GRAIN HARDWOOD.
   E. CORE: WDMA I.S. 10 STRUCTURAL COMPOSITE LUMBER
      a. SCREW WITHDRAWAL, DOOR FACE: 475 lbf
      b. SCREW WITHDRAWAL, VERTICAL DOOR EDGE: 475 lbf
   F. BLOCKING: PROVIDE AS NEEDED FOR SCHEDULED HARDWARE

08 7100 DOOR HARDWARE
1. PERFORMANCE STANDARDS
   A. DOOR HARDWARE SHALL COMPLY WITH ACCESSIBILITY REQUIREMENTS OF THE USDOJ'S "2010 ADA STANDARDS FOR ACCESSIBLE DESIGN."
2. HINGES
   A. BHMA A156.1
   B. BASIS OF DESIGN: STANLEY / BEST HINGES FBB, FIVE KNUCKLE, BALL BEARING, STANDARD WEIGHT, FULL MORTIS BUTT HINGE
   C. FINISH: 605 BRIGHT BRASS
   D. SIZE: 3-1/2 BY 3-1/2 INCHES
3. MECHANICAL LOCKS AND LATCHES
   A. BASIS OF DESIGN: ALLEGION SCHLAGE L SERIES GRADE 1 MORTISE LOCK
   B. LATCHBOLT THROW: 3/4 INCH
   C. DEADBOLTS THROW: 1 INCH
   D. BACKSET: 2-3/4 INCHES
   E. TRIM: SECTIONAL
   F. LEVER STYLE: 17 SPARTA
   G. ROSE: A ROSE
   H. CYLINDER THUMBTURN: 09-90X
   I. FINISH: 605 BRIGHT BRASS
   J. STRIKES: MANUFACTURER'S STANDARD FAT LIP
4. LOCK CYLINDERS
   A. TUMBLER TYPE, BHMA A156.5, GRADE 1 PERMANENT CORES
   B. CORE TYPE: FULL SIZE INTERCHANGABLE
   C. PROVIDE STANDARD 6-PIN CONVENTIONAL CORES WITH EVEREST 29 KEYWAY
   D. FINISH: 605 BRIGHT BRASS
5. SURFACE CLOSERS
   A. BHMA A156.4
   B. BASIS OF DESIGN: LCN 4040XP SERIES
   C. COVER: FULL METAL
   D. COLOR: STANDARD
6. WALL MOUNTED STOPS
   A. BHMA A156.16
   B. BASIS OF DESIGN: ALLEGION WS401/402CCV
   C. FINISH: 626 SATIN CHROME
7. SILENCERS
   A. TWO PER FRAME HEAD, THREE PER LATCH SIDE OF FRAME
8. HARDWARE SCHEDULE
   A. HARDWARE SET HW-1
      1.5 HINGES
      MORTISE LOCK, ENTRANCE FUNCTION ANSI F04, SCHLAGE L9050
      LOCK CYLINDER
      WALL STOP
      SILENCERS
   B. HARDWARE SET HW-2
      1.5 HINGES
      MORTISE LOCK, PRIVACY FUNCTION ANSI F22, SCHLAGE L9040
      CLOSER
      WALL STOP
      SILENCERS
      MARBLE THRESHOLD
   C. HARDWARE SET HW-3
      1.5 HINGES
      MORTISE LOCK, STOREROOM FUNCTION ANSI F07, SCHLAGE L9080 WITH VANDALGUARD
      LOCK CYLINDER
      CLOSER
      WALL STOP
      SILENCERS
   D. HARDWARE SET HW-4
      1.5 HINGES
      SALVAGED COMBINATION LOCK AND LEVER
      WALL STOP
      SILENCERS
   E. HARDWARE SET HW-5
      1.5 HINGES
      MORTISE LOCK, PASSAGE FUNCTION ANSI F01, SCHLAGE L9010
      WALL STOP
      SILENCERS

08 8000 GLAZING
1. PERFORMANCE STANDARDS
   A. SAFETY GLAZING: COMPLY WITH 16 CFR 1201, CATEGORY II. PERMANENTLY MARK GLAZING WITH CERTIFICATION LABEL OF MANUFACTURER.
2. GLASS PRODUCTS
   A. CLEAR ANNEALED FLOAT GLASS: ASTM C1036, TYPE I, CLASS 1, QUALITY-Q3
   B. FULLY TEMPERED FLOAT GLASS: ASTM C1048, KIND FT, CONDITION A UNLESS OTHERWISE INDICATED, TYPE I, CLASS 1 OR CLASS 2 AS INDICATED, QUALITY-Q3
3. GLAZING TAPES
   A. EXPANDED CELLULAR GLAZING TAPES: CLOSED-CELL, PVC FOAM TAPES; FACTORY COATED COATED WITH ADHESIVES ON BOTH SURFACES; AND COMPLYING WITH AAMA 810.1, TYPE 1.
3 MONOLITHIC GLASS SCHEDULE
   A. CLEAR GLASS TYPE GL-1: FULLY TEMPERED FLOAT GLASS
      1. BASIS OF DESIGN: VITRO ARCHITECTURAL GLASS; INTERIOR STARPHIRE GLASS
      2. MINIMUM THICKNESS OF EACH GLASS LITE: 1/4-INCH / 6MM.
      3. SAFETY GLAZING REQUIRED.

DIVISION 09 FINISHES

09 2216 NON-STRUCTURAL METAL FRAMING
1. PERFORMANCE REQUIREMENTS
   A. HORIZONTAL DEFLECTION AT GYPSUM FINISHED WALLS: FOR COMPOSITE WALL ASSEMBLIES, LIMITED TO L/240 OF THE WALL HEIGHT BASED ON HORIZONTAL LOADING OF 5 LBF/SQFT
   B. HORIZONTAL DEFLECTION AT TILE FINISHED WALLS: FOR COMPOSITE WALL ASSEMBLIES, LIMITED TO L/360 OF THE WALL HEIGHT BASED ON HORIZONTAL LOADING OF 5 LBF/SQFT
2. FRAMING SYSTEMS
   A. FRAMING MEMBERS COMPLY WITH ASTM C754
      a. STEEL SHEET COMPONENTS COMPLY WITH ASTM C645
      b. PROTECTIVE COATING: ASTM A653/A653M, G60, HOT-DIP GALVANIZED.
   B. PROVIDE GALVANIZED STEEL FRAMING MEMBERS IN THE SHAPES, SIZES, AND THICKNESSES INDICATED ON THE DRAWINGS.
      a. THICKNESSES INDICATED ARE MINIMUM. PROVIDE MATERIALS AT THE THICKNESSES REQUIRED TO MEET THE DEFLECTION LIMITS INDICATED.

09 2900 GYPSUM BOARD
1. INTERIOR GYPSUM BOARD
   A. GYPSUM WALLBOARD: ASTM C1396/C1396M
      a. THICKNESS: 1/2 INCH
      b. LONG EDGES: TAPERED AND FEATURED FOR PREFILLING.
   B. GYPSUM BOARD, TYPE X: ASTM C1369/C1369M
      a. THICKNESS: 5/8 INCH
      b. LONG EDGES: TAPERED AND FEATURED FOR PREFILLING.
   C. MOLD-RESISTANT GYPSUM BOARD: ASTM C1369/C1369M WITH MOISTURE- AND MOLD-RESISTANT CORE AND PAPER SURFACES
      a. CORE: AS INDICATED
      b. LONG EDGES: TAPERED
      c. MOLD RESISTANCE: ASTM D3273, SCORE OF 10 PER ASTM D3274
2. TILE BACKING PANELS
   A. CEMENTITIOUS BACKER UNITS: ANSI A118.9 AND ASTM C1288 OR ASTM C1325 WITH STANDARD EDGES
      a. THICKNESS: AS INDICATED AND MATCHING ADJACENT GYPSUM BOARD
      b. MOLD RESSITANCE: ASTM D3273, SCORE OF 10 PER ASTM D3274
3. TRIM ACCESSORIES
   A. INTERIOR TRIM
      a. MATERIAL: PAPER-FACED GALVANIZED-STEEL SHEET
      b. SHAPES: AS NEEDED TO FINISH OFF EXPOSED EDGES, CORNERS, OR EXPANSION JOINTS.
      c. BASE-OF-WALL GALVANIZED MOISTURE BARRIER TRIM: GALVANIZED-STEEL SHEET, 2 INCHES HIGH.
         1. LOCATION: BASEMENT WALLS
4. JOINT TREATMENT MATERIALS
   A. GYPSUM BOARD JOINT TAPE: PAPER
   B. TILE BACKING PANELS: MANUFACTURER RECOMMENDATION.
   C. GYPSUM BOARD JOINT COMPOUND: DRYING TYPE, ALL-PURPOSE
   D. TILE BACKING PANELS JOINT COMPOUND: MANUFACTURER RECOMMENDATION.
5. INSTALLATION AND FINISH OF PANELS
   A. CONTROL JOINTS: 1/2 INCH WIDE, INSTALLED IN ACCORDANCE WITH ASTM C840, AS APPROVED BY ARCHITECT
   B. ISOLATE PERIMETER AT STRUCTURAL ABUTMENTS WITH 1/4-1/2 INCH SPACES.
   C. APPLY PANELS PARALLEL TO FRAMING AND MINIMIZE END JOINTS.
      a. ON FURRING MEMBERS, LOCATE EDGE JOINTS OVER FURRING MEMBERS.
   D. FINISH LEVEL: ACCORDING TO ASTM C840, WITH LEVEL 4 BEING THE STANDARD FOR EXPOSED SURFACES.

09 9124 INTERIOR PAINTING
1. MANUFACTURERS:
   A. SHERWIN-WILLIAMS: PROMAR 200 ZERO VOC
   B. BENJAMIN MOORE: ULTRA SPEC 500
2. COLORS: AS INDICATED ON THE DRAWINGS
   A. TWENTY PERCENT OF SURFACE AREA WILL BE PAINTED WITH DEEP TONES.
3. GYPSUM SUBSTRATES:
   A. SAND FINISH COMPOUND SMOOTH
   B. INSTITUTIONAL LOW-ODOR/VOC LATEX SYSTEM
      1. PRIME COAT: LATEX PRIMER SEALER, MPI #149
      2. INTERMEDIATE COAT: LATEX, MATCHING TOPCOAT
      2. TOP COAT: LATEX, EGGSHELL, MPI #145
4. CMU SUBSTRATES
   A. REMOVE EFFLORESCENCE AND CHALK. MAX MOISTURE CONTENT OF 12 PERCENT.
   B. INSTITUTIONAL LOW-ODOR/VOC LATEX SYSTEM
      1. BLOCK FILLER: LATEX, MPI #4
      2. INTERMEDIATE COAT: LATEX, MATCHING TOPCOAT
      3. TOPCOAT: LATEX, EGGSHELL, MPI #145
5. STEEL SUBSTRATES
   A. CLEAN FIELD WELDS AND ABRADED AREAS. TOUCH-UP EXPOSED AREAS WITH SAME MATERIAL AS SHOP PRIMER.
   B. INSTITUTIONAL LOW-ODOR/VOC LATEX SYSTEM
      1. INTERMEDIATE COAT: LATEX, MATCHING TOPCOAT
      2. TOPCOAT: LATEX, SEMI-GLOSS, MPI #147
6. WOOD SUBSTRATES: WOOD TRIM, DOORS, AND WOOD BOARD PANELING
   A. SCRAPE AND CLEAN KNOTS, APPLY COAT OF KNOT SEALER BEFORE PRIMER. SAND SURFACES EXPOSED TO VIEW. PRIME EDGES, ENDS, FACES, UNDERSIDES, AND BACKSIDES. FILL HOLES AND IMPERFECTIONS WITH PUTTY OR PLASTIC WOOD FILL AND SAND SMOOTH.
   B. INSTITUTIONAL LOW-ODOR/VOC LATEX SYSTEM
      1. PRIME COAT: LATEX FOR INTERIOR WOOD, MPI #39
      2. INTERMEDIATE COAT: LATEX, MATCHING TOPCOAT
      3. TOPCOAT: LATEX, SEMI-GLOSS, MPI #147
7. PAINT THE FOLLOWING WORK WHERE EXPOSED IN OCCUPIED SPACES:
      1. EQUIPMENT INCLUDING PANELBOARDS
      2. UNINSULATED METAL PIPING
      3. UNINSULATED PLASTIC PIPING
      4. PIPE HANGERS AND SUPPORTS
      5. METAL CONDUIT
      6. PLASTIC CONDUIT
      7. DUCT, EQUIPMENT, AND PIPE INSULATION HAVING COTTON OR CANVAS INSULATION COVERING OR OTHER PAINTABLE JACKET MATERIAL
      8. PRIMED OR GALVANIZED METAL SURFACES

DIVISION 10 SPECIALTIES

10 1423.16 ROOM-IDENTIFICATION PANEL SIGNAGE
1. LAMINATED-SHEET SIGNS: PHOTOPOLYMER FACE SHEET WITH RAISED GRAPHICS LAMINATED TO ACRYLIC BACKING SHEET TO PRODUCE COMPOSITE SHEET.
   A. COMPOSITE-SHEET THICKNESS: 0.25 INCH
   B. SURFACE-APPLIED GRAPHICS: APPLIED VINYL FILM
   C. COLORS: MATCH EXISTING ADJACENT SIGNS
   D. EDGE CONDITION: SQUARE CUT
   E. CORNER CONDITION: SQUARE
   F. MOUNTING: SURFACE MOUNTED TO WALL WITH TWO-FACE TAPE.
   G. TEXT AND TYPEFACE: TYPEFACE MATCHING EXISTING ADJACENT SIGNS. FINISH RAISED CHARACTERS TO CONTRAST WITH BACKGROUND COLOR, AND FINISH BRAILLE TO MATCH BACKGROUND COLOR.
2. SIGN MATERIALS
   A. ACRYLIC SHEET: ASTM D4802, CATEGORY AS STANDARD WITH MANUFACTURER, TYPE UVF (UV FILTERING).
   B. VINYL FILM: UV-RESISTANT VINYL FILM WITH PRESSURE-SENSITIVE, PERMANENT ADHESIVE; DIE CUT TO FORM CHARACTERS OR IMAGES AS INDICATED ON DRAWINGS.
   C. TWO-FACE TAPE: HIGH-BOND, FOAM-CORE TAPE, 0.045 INCH THICK, WITH ADHESIVE BOTH SIDES.
3. EXISTING SIGN COORDINATION
   A. THE INTENT OF THE SPECIFICATION IS TO MATCH THE EXISTING SIGNS IN THE BUILDING. EXISTING CONDITIONS WILL TAKE PRECEDENT OVER ANY DESCRIPTION OR MATERIAL THAT DOES NOT MATCH THE EXISTING CONDITIONS.

FARMERS & MERCHANTS BANK
25 WESTMINSTER PIKE
REISTERTOWN, MARYLAND, 21136
INTERIOR ALTERATION

ARCHITECTURAL REGISTRATION BOARD 8586 TIMOTHY H. SANDERS STATE OF MARYLAND

I CERTIFY THAT THESE DOCUMENTS WERE PREPARED OR APPROVED BY ME AND THAT I AM A DULY LICENSED ARCHITECT UNDER THE LAWS OF THE STATE OF MARYLAND.

LICENSE NO.: 8586

EXP. DATE: 21 MAY 2027

THESE DRAWINGS ARE NOT PERMITTED TO BE COPIED OR REPRODUCED, EITHER WHOLLY OR PARTIALLY, UNLESS WRITTEN PERMISSION IS FIRST OBTAINED FROM SANDERS DESIGNS, P.A.

SANDERS | DESIGNS
ARCHITECTS PLANNERS
WWW.SANDERSDESIGNS.COM
MAILBOX@SANDERSDESIGNS.COM
9727 GREENSIDE DRIVE, SUITE 202, COCKEYSVILLE, MARYLAND 21030
T: (410) 560 2624

No.	Date	Revision

Project No.: 26.102
Date: 29 SEPTEMBER 2026
Scale: NONE
Edition: PERMIT SET
Drawing Name: ARCHITECTURAL SPECIFICATIONS
Drawing Number: A801

GENERAL NOTES

1) THE DRAWINGS ARE DIAGRAMMATIC AND REPRESENT THE GENERAL LOCATION AND ARRANGEMENT OF EQUIPMENT AND SYSTEMS. EXACT LOCATIONS CAN NOT BE REPRESENTED ON THIS SIZE AND SCALE OF A DRAWING. THE CONTRACTOR SHALL CLOSELY COORDINATE EXACT LOCATIONS IN THE FIELD WITH THE OWNER, OTHER TRADES AND OTHER EQUIPMENT, PIPING, ETC. TO ENSURE A "CLEAN" AND "FUNCTIONING" INSTALLATION WITH MANUFACTURER REQUIRED CLEARANCES, ETC.

2) ALL ITEMS THAT ARE INDICATED IN "BOLD" SHALL BE CONSIDERED NEW UNLESS OTHERWISE NOTED.

3) CONTRACTOR TO INSTALL, SIZE AND TRAP REFRIGERANT PIPING PER THE MANUFACTURER'S RECOMMENDATIONS.

4) DUCTWORK SYSTEMS IN AREAS WITH DRYWALL CEILINGS/BULKHEADS SHALL BE BALANCED PRIOR TO CLOSING OF THE CEILING. ALL AIR DEVICES MOUNTED IN DRYWALL CEILING TO HAVE TRIM PANELS.

5) COORDINATE ALL CEILING MOUNTED AIR DEVICES WITH LIGHTING AND SPRINKLER HEAD LAYOUT. ADJUST AS REQUIRED TO CONFORM TO GENERAL PATTERN AS INDICATED ON THE MECHANICAL NEW WORK PLANS.

6) ALL EXISTING H.V.A.C. AND PIPING/PLUMBING INFORMATION SHOWN WAS OBTAIN FROM FIELD SURVEYS. CONTRACTOR MUST VERIFY THIS INFORMATION PRIOR TO ANY WORK BEING PERFORMED.

7) ANY ITEM (AIR DEVICES INCLUDED) NOT BEING REUSED SHALL BE TURNED OVER TO A BUILDING COORDINATOR FOR BUILDING STOCKPILE.

8) ANY CUTTING OR PATCHING OF THE ROOF TO BE DONE BY THE OWNER'S ROOFING CONTRACTOR SO NOT TO VOID ANY ORIGINAL WARRANTIES.

9) ALL DOMESTIC WATER PIPING SHALL BE INSTALLED ON THE WARM SIDE OF THE BUILDING INSULATION.

10) A STRUCTURAL ENGINEER IS TO VERIFY THE WEIGHTS AND LOCATIONS OF ALL ROOF MOUNTED HVAC EQUIPMENT PRIOR TO INSTALLATION.

11) PLUMBING ROUGH-IN CONNECTIONS ARE APPROXIMATE LOCATIONS. ALL ROUGH-IN CONNECTIONS TO BE COORDINATED IN THE FIELD BY THE PLUMBING CONTRACTOR.

12) ALL DUCTWORK WILL BE FABRICATED OF GALVANIZED SHEET METAL. ALL FABRICATION AND INSTALLATION DETAILS SHALL BE PER THE SMACNA SHEET METAL MANUAL.

13) ALL NEW SUPPLY AND RETURN AIR DUCTWORK WITHIN 10'-0" OF HVAC UNIT SHALL BE LINED WITH 1" INTERIOR LINING FOR SOUND AND THERMAL INSULATION. DUCT SIZES INDICATED ON DRAWINGS ARE CLEAR INSIDE DIMENSIONS. INCREASE DUCT SIZES 2" IN EACH DIRECTION TO ACCOMODATE LINING.

14) ALL UNLINED SUPPLY AND RETURN AIR DUCTWORK SHALL BE INSULATED WITH 2" FIBERGLASS DUCTWRAP WITH VAPOR BARRIER.

15) ALL H.V.A.C. EQUIPMENT SHALL BE PROVIDE COMPLETE WITH CONTROLS, THERMOSTATS AND FAN SWITCHES WHERE LOCATED ON DRAWINGS.

16) SUPPLY AIR DIFFUSERS, RETURN AIR GRILLES/REGISTERS AND EXHAUST AIR AIR DEVICES SHALL HAVE SIZES AND QUANTITIES AS INDICATED ON DRAWINGS. ALL AIR DEVICES SHALL HAVE STEEL CONSTRUCTION AND OFF-WHITE BAKED ENAMEL FINISH.

17) ALL ITEMS AND EQUIPMENT AS SHOWN AND SCHEDULED SHALL BE INSTALLED WITH CAPACITIES AS SCHEDULED. ALL MANUFACTURES SHALL BE EQUAL TO THOSE INDICATED.

18) ALL SERVICE VALVES, UNIONS, GAS COCKS, ETC., SHALL BE MANUFACTURED BY NIBCO OR EQUAL.

19) ALL DOMESTIC WATER PIPING SHALL BE INSULATED WITH 1" PRE-MOLDED FIBERGLASS INSULATION WITH AN ALL SERVICE JACKET. FITTINGS SHALL BE INSULATED WITH FIBERGLASS AND COVERED WITH PVC JACKETS.

20) ALL SANITARY PIPING LOCATED ABOVE FOOD STORAGE RACKS, ABOVE FOOD PREPERATION AREAS OR ABOVE FOOD SERVING AREAS SHALL BE COPPER PIPE WITH SOLDERED COPPER DRAINAGE AND WASTE FITTINGS.

21) ALL REFRIGERANT PIPING SHALL BE WRAPPED WITH 1-1/2" ARMAFLEX INSULATION.

22) ALL SANITARY PIPING SHALL BE SLOPED AT MINIMUM 1/8" PER FOOT. ALL SANITARY PIPING 2" AND SMALLER SHALL BE SLOPED AT 1/4" PER FOOT.

23) ALL INDIRECT PIPING THAT IS EQUAL OR GREATER THEN 4'-0" LONG SHALL BE PROVIDED WITH TRAP AT EQUIPMENT CONNECTION.

24) THE CONTRACTOR SHALL COORDINATE THE DRAWINGS BETWEEN ALL SUB CONTRACTORS FOR CONFLICT AND NOTIFY THE ARCHITECT PRIOR TO BID OF ANY DISCREPANCIES AND/OR CONFLICTS BEFORE PROCEEDING WITH THE BID. CONTRACTOR SHALL ALSO VERIFY ALL DIMENSIONS AND CONDITIONS SHOWN ON DRAWINGS AT THE JOB SITE AND SHALL NOTIFY THE ARCHITECT AND THE OWNER OF ANY DISCREPANCIES, OMISSIONS, AND/OR CONFLICT BEFORE PROCEEDING WITH THE PROJECT. TO THE EXTENT THAT THE CONTRACTOR DISCOVERS ANY SUCH DISCREPANCIES AND FAILS TO NOTIFY THE ARCHITECT, NO EXCUSE WILL BE ENTERTAINED FOR FAILURE TO CARRY OUT THE WORK IN A SATISFACTORY MANNER ACCEPTABLE TO THE ARCHITECT AND THE OWNER.

25) ALL WORK SHALL CONFORM TO ALL APPLICABLE FEDERAL, STATE AND LOCAL BUILDING CODES. CONTRACTOR SHALL REVIEW THE DESIGN FOR CODE COMPLIANCE DURING THE BIDDING PROCESS. TO THE EXTENT CONTRACTOR DISCOVERS CODE DISCREPANCIES AND FAILS TO NOTIFY THE ARCHITECT, NO EXCUSE WILL THEREAFTER BE ENTERTAINED FOR FAILURE TO CARRY OUT THE WORK IN A SATISFACTORY MANNER ACCEPTABLE TO THE ARCHITECT AND THE OWNER.

26) THE GENERAL CONTRACTOR SHALL BE RESPONSIBLE FOR REMOVAL AND DISPOSAL OF ALL CONSTRUCTION DEBRIS AND REFUSE FROM THE JOB SITE.

27) UPON COMPLETION OF THE WORK, THE GENERAL CONTRACTOR SHALL PREPARE A PUNCH LIST FIRST AND NOTIFY ARCHITECT TO REVIEW AND VERIFY PUNCH-LIST FOR CORRECTIONS.

MECHANICAL LEGEND

- VD — VOLUME DAMPER
- FD — FIRE DAMPER W/ACCESS DOOR
- SD — SMOKE DAMPER W/ ACCESS DOOR
- S/FD — SMOKE/FIRE DAMPER W/ ACCESS DOOR
- SP — STATIC PRESSURE SENSOR
- MOD — MOTOR OPERATED DAMPER
- FLEXIBLE CONNECTION
- SOUND LINED DUCTWORK
- SOUND LINED DUCTWORK
- PATCH IN DUCTWORK (SIDE)
- PATCH IN DUCTWORK (TOP/BOTTOM)
- CAPPED DUCTWORK
- CAPPED DUCTWORK
- DUCTWORK TRANSITIONS
- ROUND TO RECTANGULAR TRANSITION
- R — D — RISE AND DROP IN DUCTWORK
- TURNING VANES
- RADIUS ELBOW
- SUPPLY DUCT DOWN
- SUPPLY DUCT UP
- RETURN DUCT DOWN
- RETURN DUCT UP
- EXHAUST DUCT DOWN
- EXHAUST DUCT UP
- AIR TITE FITTING WITH INTEGRAL VOLUME DAMPER
- TOP AIR TITE FITTING CONNECTION
- FLEXIBLE DUCT
- FLEXIBLE DUCT
- SUPPLY AIR DIFFUSER
- LINEAR SUPPLY AIR DIFFUSER
- ROUND SUPPLY AIR DIFFUSER
- RETURN AIR GRILLE (REGISTER)
- EXHAUST AIR GRILLE (REGISTER)
- DIRECTION OF AIR FLOW
- CONNECT TO EXISTING SYMBOL
- T — THERMOSTAT
- T_H — HUMIDISTAT
- T_N — NIGHT SETBACK THERMOSTAT
- H — HUMIDISTAT
- S — SMOKE DETECTOR
- $ — ON/OFF SWITCH
- CFM — CUBIC FEET PER MINUTE (CFM)
- ø — DIAMETER
- 1 — DRAWING NOTE
- 1 — REVISION SYMBOL
- 1" UNDERCUT DOOR
- VAV BOX

PIPING LEGEND

- SAN — SANITARY PIPE
- V — VENT PIPE
- CW — COLD WATER PIPE
- HW — HOT WATER PIPE
- HWR — HOT WATER RECIRC. PIPE
- SW — STORM WATER PIPE
- CD — CONDENSATE DRAIN PIPE
- PCD — PUMPED CONDENSATE DRAIN PIPE
- FD — FOUNDATION DRAIN PIPE
- SW — STORM WATER
- G — NATURAL GAS PIPE
- RS — REFRIGERANT SUCTION
- RL — REFRIGERANT LIQUID
- F — FIRE PIPE
- SP — SPRINKLER PIPE
- FLOW METER FITTING
- T.S. — OUTSIDE STEM & YOKE VALVE WITH TAMPER SWITCH
- F.S. — FLOW SWITCH
- UNION
- PRESSURE REDUCING VALVE
- BALANCING VALVE
- BUTTERFLY VALVE
- M — BUTTERFLY VALVE WITH MEMORY STOP
- MULTI-PURPOSE VALVE
- GLOBAL VALVE
- DIRECTION OF LIQUID FLOW
- GAS COCK
- BALL VALVE
- CHECK VALVE
- PIPE DOWN
- PIPE UP
- C.O. — CLEANOUT (FLOOR & WALL)
- ANGLE STOP VALVE
- FLOOR DRAIN
- SPRINKLER HEAD

ABBREVATIONS LIST

A.H.U.	AIR HANDLING UNIT
C.F.M.	CUBIC FEET PER MINUTE
E.A.T.	ENTERING AIR TEMPERATURE
L.A.T.	LEAVING AIR TEMPERATURE
E.W.T.	ENTERING WATER TEMPERATURE
L.W.T.	LEAVING WATER TEMPERATURE
EX.	EXISTING
F.D.	FLOOR DRAIN
F.S.	FLOOR SINK
F.P.M.	FEET PER MINUTE
F.O.	FLAT OVAL
FT.	FOOT
FT^2	SQUARE FEET
HP	HORSEPOWER
LBS.	POUNDS
LBS/HR	POUNDS PER HOUR
R.L.	RAIN LEADER
R.T.U.	ROOF TOP UNIT
RX.	REMOVE EXISTING
TYP.	TYPICAL
V.T.R.	VENT THRU ROOF

NOTICE TO CONTRACTORS:

ALL CONTRACTORS PRIOR TO BID SUBMISSION PROCESS SHALL VISIT PROPOSED WORK SITE AND FIELD VERIFY ALL EXISTING CONDITIONS. ANY CONDITIONS THAT DIFFERS FROM THAT SHOWN ON THIS PLAN SHALL BE REPORTED TO ARCHITECT/ENGINEER SO THAT NEW AND REVISED BID DRAWINGS OR INFORMATION MAY BE ISSUED. MODIFICATIONS TO SCOPE OF WORK WHICH RESULTS FROM CONTRACTORS NEGLECT TO VISIT THE SITE PRIOR TO SUBMITTING BID, SHALL BE THE CONTRACTORS SOLE RESPONSIBILITY.

FARMERS & MERCHANTS BANK
25 WESTMINSTER PIKE
REISTERTOWN, MARYLAND, 21136
INTERIOR ALTERATION

STATE OF MARYLAND — JOHN T. REGAN JR. — No. 19994 — PROFESSIONAL ENGINEER — 9.30.26

I CERTIFY THAT THESE DOCUMENTS WERE PREPARED OR APPROVED BY ME AND THAT I AM A DULY LICENSED PROFESSIONAL ENGINEER UNDER THE LAWS OF THE STATE OF MARYLAND.

LICENSE NO.: 19994

EXP. DATE: 3/31/2027

THESE DRAWINGS ARE NOT PERMITTED TO BE COPIED OR REPRODUCED, EITHER WHOLLY OR PARTIALLY, UNLESS WRITTEN PERMISSION IS FIRST OBTAINED FROM SANDERS DESIGNS, P.A.

MECHANICAL & ELECTRICAL DESIGN CONSULTANTS, INC.
1901 N. Fountain Green Road
Bel Air, Maryland 21015-1411
410-893-2822 • Fax 410-803-0442
web site: www.jlrdesign.net

SANDERS | DESIGNS
ARCHITECTS PLANNERS
WWW.SANDERSDESIGNS.COM
MAILBOX@SANDERSDESIGNS.COM
9727 GREENSIDE DRIVE, SUITE 202, COCKEYSVILLE, MARYLAND 21030 T: (410) 560 2624

No.	Date	Revision

Project No.:
Date:
Scale:
Edition: PERMIT SET
Drawing Name: GENERAL NOTES AND LEGEND
Drawing Number: M-1

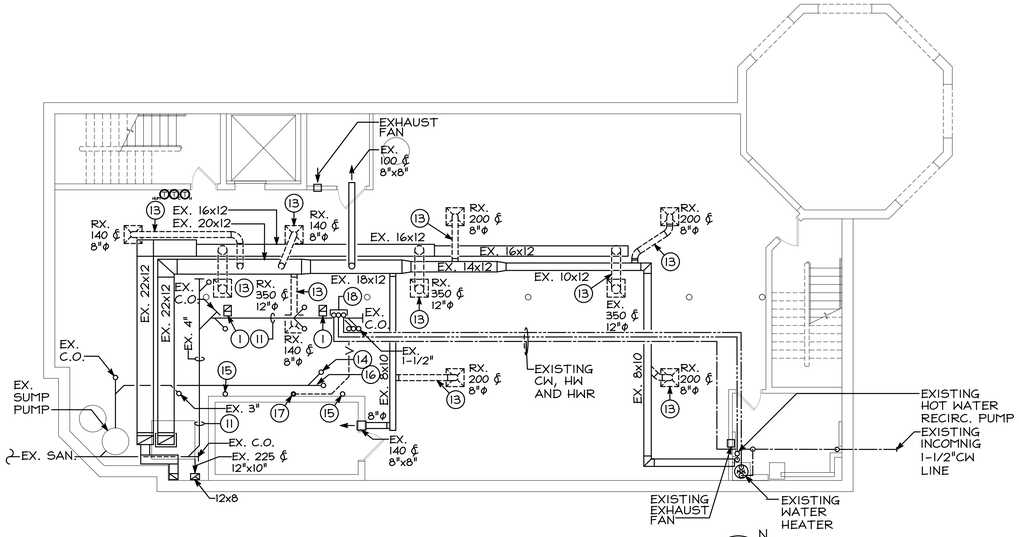

DEMO - BASEMENT - MECHANICAL

SCALE: 1/8"=1'-0"

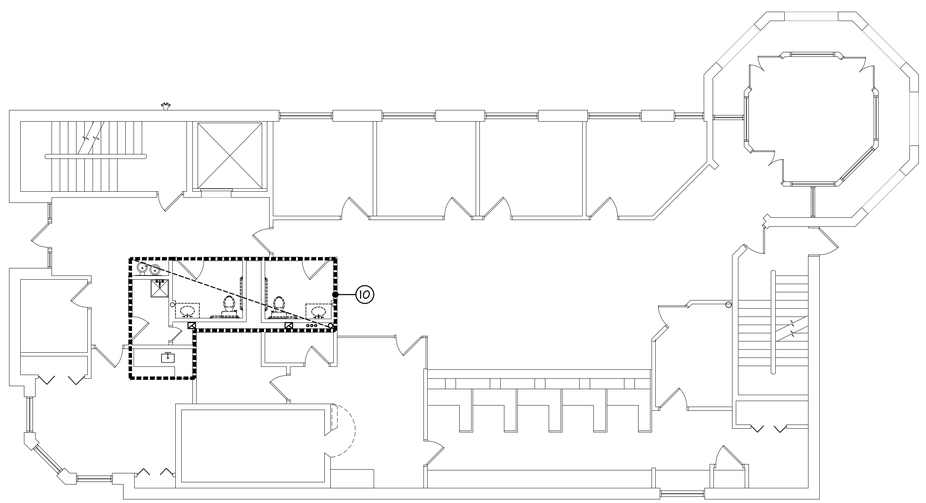

DEMO - FIRST FLOOR - MECHANICAL

SCALE: 1/8"=1'-0"

DRAWING NOTES

1. 10x8 DUCT CAPPED FOR FUTURE CONNECTION.
2. REMOVE EXISTING WATER CLOSET AND WAX RING. REFER TO NEW WORK PLAN FOR CONTINUATION.
3. REMOVE EXISTING LAVATORY AND FAUCET. DISCONNECT AND REMOVE EXISTING SANITARY AND P-TRAP FOR REPLACEMENT. REFER TO NEW WORK PLANS FOR CONTINUATION.
4. REMOVE EXISTING KITCHEN SINK. DISCONNECT AND REMOVE EXISTING SANITARY AND P-TRAP FOR REPLACEMENT. REFER TO NEW WORK PLANS FOR CONTINUATION.
5. EXISTING VENT PIPING SUPPORTED ABOVE CEILING.
6. EXISTING SANITARY PIPING BELOW FLOOR.
7. REMOVE EXISTING WATER CLOSET AND CW CONNECTION. REFER TO NEW WORK PLAN FOR CONTINUATION.
8. REMOVE EXISTING LAVATORY AND FAUCET. DISCONNECT AND REMOVE EXISTING CW & HW TO FAUCET FOR REPLACEMENT. REFER TO NEW WORK PLANS FOR CONTINUATION.
9. EXISTING DOMESTIC WATER PIPING SUPPORTED ABOVE CEILING.
10. REFER TO EXISTING PART PLAN FOR PLUMBING IN THIS AREA.
11. EXISTING SANITARY PIPING LOCATED ABOVE CEILING.
12. REMOVE EXISTING WATER CLOSET AND CW CONNECTION. REFER TO NEW WORK PLAN FOR CONTINUATION.
13. REMOVE EXISTING DUCTWORK AND ASSOCIATED AIR DEVICE. PATCH AND SEAL DUCTWORK AT MAIN.
14. EXISTING SANITARY STUB UP FOR WATER CLOSET.
15. EXISTING STUB UP FOR LAVATORY.
16. EXISTING CLEANOUT.
17. EXISTING SANITARY STUB UP.
18. EXISTING CW, HW AND HWR PIPES UP TO SECOND FLOOR.

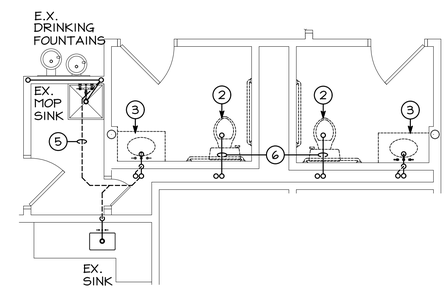

EXISTING - FIRST FLOOR - SANITARY/VENT

SCALE: 1/4"=1'-0"

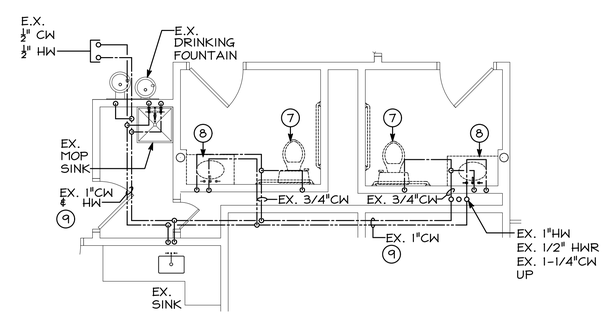

EXISTING - FIRST FLOOR - DOMESTIC WATER

SCALE: 1/4"=1'-0"

0 1 2 3 4 8 12

SCALE:1/4"=1'-0"

0 4 8 16 24

SCALE:1/8"=1'-0"

FARMERS & MERCHANTS BANK

25 WESTMINSTER PIKE
REISTERTOWN, MARYLAND, 21136

INTERIOR ALTERATION

I CERTIFY THAT THESE DOCUMENTS WERE PREPARED OR APPROVED BY ME AND THAT I AM A DULY LICENSED PROFESSIONAL ENGINEER UNDER THE LAWS OF THE STATE OF MARYLAND.

LICENSE NO.: 19994

EXP. DATE: 3/31/2027

THESE DRAWINGS ARE NOT PERMITTED TO BE COPIED OR REPRODUCED, EITHER WHOLLY OR PARTIALLY, UNLESS WRITTEN PERMISSION IS FIRST OBTAINED FROM SANDERS DESIGNS, P.A.

MECHANICAL & ELECTRICAL DESIGN CONSULTANTS, INC.
1901 N. Fountain Green Road
Bel Air, Maryland 21015-1411
410-893-2822 • Fax 410-803-0442
web site: www.jlrdesign.net

SANDERS | DESIGNS
ARCHITECTS PLANNERS
WWW.SANDERSDESIGNS.COM
MAILBOX@SANDERSDESIGNS.COM
9727 GREENSIDE DRIVE, SUITE 202, COCKEYSVILLE, MARYLAND 21030 T: (410) 560 2624

No.	Date	Revision

Project No.:

Date:

Scale:

Edition:

PERMIT SET

Drawing Name:

EXISTING AND DEMO FLOOR PLANS

Drawing Number:

M-2

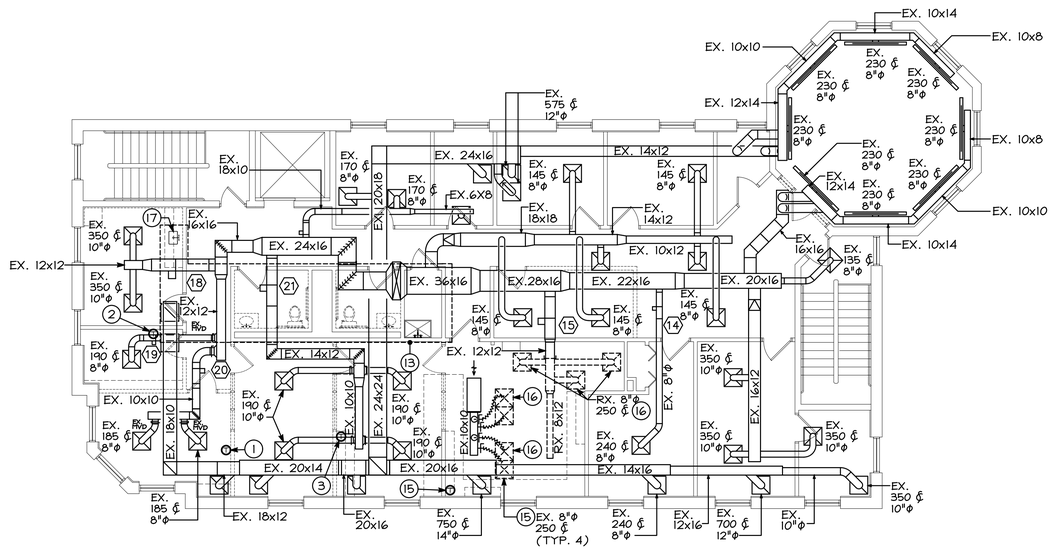

DEMO - SECOND FLOOR - MECHANICAL

SCALE: 1/8"=1'-0"

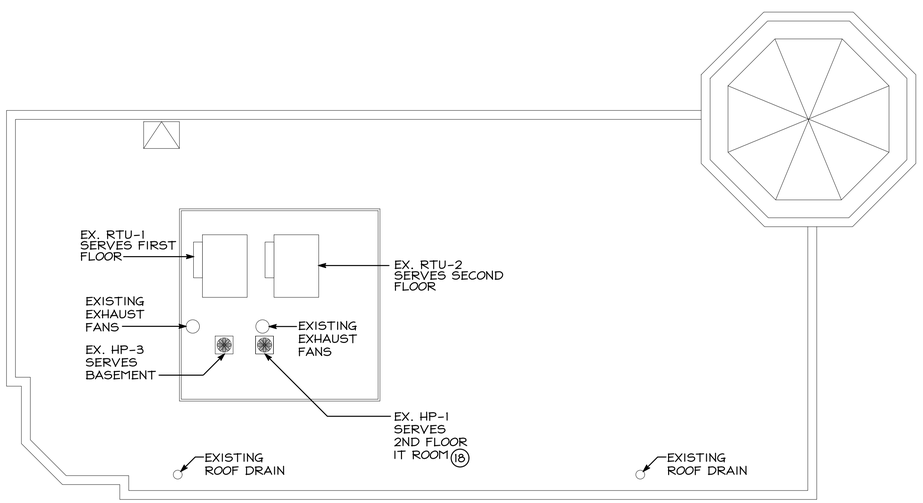

DEMO - THIRD FLOOR - MECHANICAL

SCALE: 1/8"=1'-0"

DRAWING NOTES

1. REMOVE EXISTING THERMOSTAT AND ASSOCIATED WIRING SERVING ZONE DAMPER 20.
2. EXISTING THERMOSTAT SERVING ZONE DAMPER 19 TO REMAIN.
3. RELOCATE EXISTING THERMOSTAT SERVING ZONE DAMPER 20. REFER TO NEW FLOOR PLAN FOR LOCATION.
4. REMOVE EXISTING WATER CLOSET AND WAX RING. REFER TO NEW WORK PLAN FOR CONTINUATION.
5. REMOVE EXISTING LAVATORY AND FAUCET. DISCONNECT AND REMOVE EXISTING SANITARY AND P-TRAP FOR REPLACEMENT. REFER TO NEW WORK PLANS FOR CONTINUATION.
6. REMOVE EXISTING KITCHEN SINK. DISCONNECT AND REMOVE EXISTING SANITARY AND P-TRAP FOR REPLACEMENT. REFER TO NEW WORK PLANS FOR CONTINUATION.
7. EXISTING VENT PIPING SUPPORTED ABOVE CEILING.
8. EXISTING SANITARY PIPING BELOW FLOOR.
9. REMOVE EXISTING WATER CLOSET AND CW CONNECTION. REFER TO NEW WORK PLAN FOR CONTINUATION.
10. REMOVE EXISTING LAVATORY AND FAUCET. DISCONNECT AND REMOVE EXISTING CW & HW TO FAUCET FOR REPLACEMENT. REFER TO NEW WORK PLANS FOR CONTINUATION.
11. REMOVE EXISTING KITCHEN SINK. DISCONNECT AND REMOVE EXISTING CW & HW TO FAUCET. REFER TO NEW WORK PLANS FOR CONTINUATION.
12. EXISTING DOMESTIC WATER PIPING SUPPORTED ABOVE CEILING.
13. REFER TO EXISTING PART PLAN FOR PLUMBING IN THIS AREA.
14. REMOVE EXISTING AIR DEVICE AND RELOCATE PER NEW WORK FLOOR PLAN.
15. EXISTING THERMOSTAT ASSOCIATED WITH VAV BOX 15.
16. REMOVE EXISTING AIR DEVICE (TYPICAL).
17. REMOVE EXISTING SINK AND ASSOICATED PLUMBING. REFER TO NEW WORK PLAN FOR LOCATION OF SINK.
18. REMOVE EXISTING HOUSEKEEPING PAD AND REINSTALL EXISTING HEAT PUMP SERVING IT ROOM ON NEW EQUIPMENT RAILS. WORK CANNOT BE PERFORMED UNTIL NEW REDUNDANT HEAT PUMP SERVING IT ROOM IS INSTALLED. ONE HEAT PUMP SERVING IT ROOM MUST BE FUNCTIONAL AT ALL TIMES.

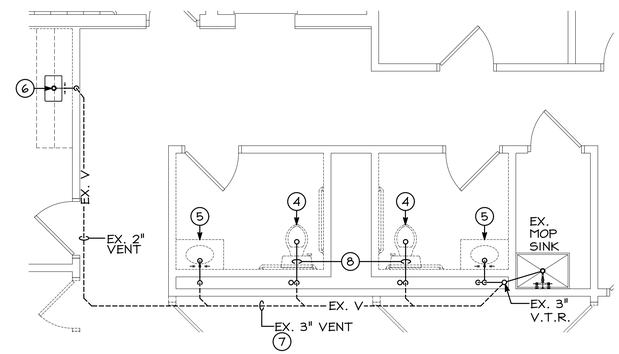

EXISTING - SECOND FLOOR - SANITARY/VENT

SCALE: 1/4"=1'-0"

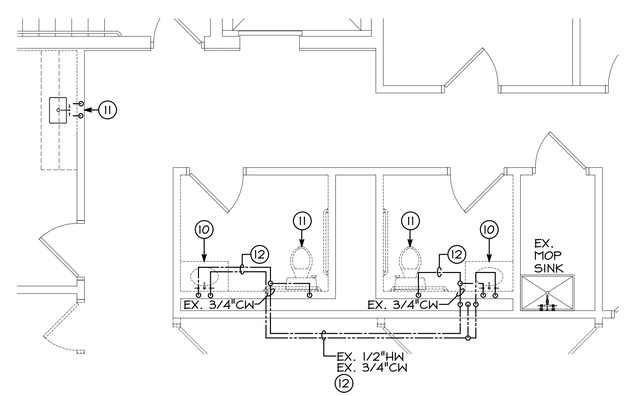

EXISTING - SECOND FLOOR - DOMESTIC WATER

SCALE: 1/4"=1'-0"

0 1 2 3 4 8 12 SCALE:1/4"=1'-0"

0 4 8 16 24 SCALE:1/8"=1'-0"

FARMERS & MERCHANTS BANK
25 WESTMINSTER PIKE
REISTERTOWN, MARYLAND, 21136
INTERIOR ALTERATION

I CERTIFY THAT THESE DOCUMENTS WERE PREPARED OR APPROVED BY ME AND THAT I AM A DULY LICENSED PROFESSIONAL ENGINEER UNDER THE LAWS OF THE STATE OF MARYLAND.

LICENSE NO.: 19994

EXP. DATE: 3/31/2027

THESE DRAWINGS ARE NOT PERMITTED TO BE COPIED OR REPRODUCED, EITHER WHOLLY OR PARTIALLY, UNLESS WRITTEN PERMISSION IS FIRST OBTAINED FROM SANDERS DESIGNS, P.A.

MECHANICAL & ELECTRICAL DESIGN CONSULTANTS, INC.
1901 N. Fountain Green Road
Bel Air, Maryland 21015-1411
410-893-2822 • Fax 410-803-0442
web site: www.jlrdesign.net

SANDERS | DESIGNS
ARCHITECTS PLANNERS
WWW.SANDERSDESIGNS.COM
MAILBOX@SANDERSDESIGNS.COM
9727 GREENSIDE DRIVE, SUITE 202, COCKEYSVILLE, MARYLAND 21030 T: (410) 560 2624

No.	Date	Revision

Project No.:
Date:
Scale:
Edition:
PERMIT SET

Drawing Name:
EXISTING AND DEMO FLOOR PLANS

Drawing Number:
M-3

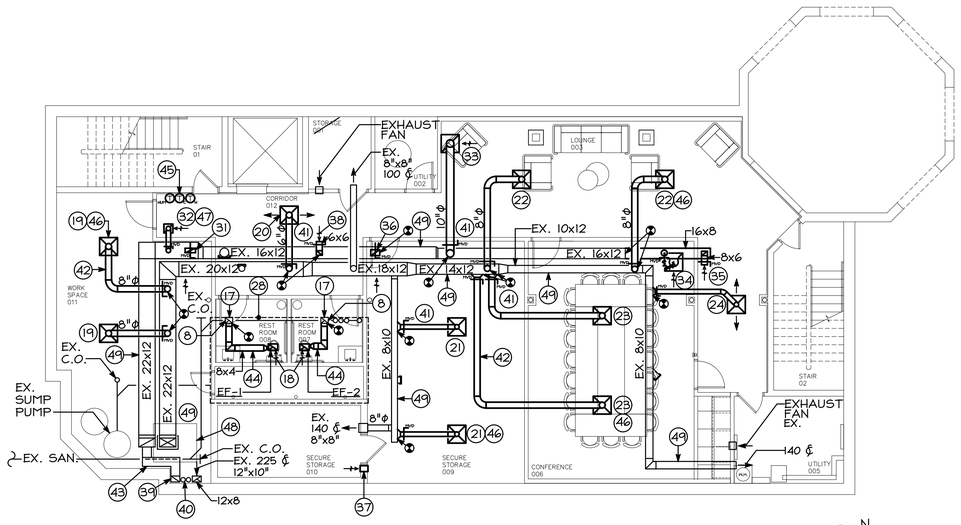

NEW WORK - BASEMENT FLOOR - MECHANICAL

SCALE: 1/8"=1'-0"

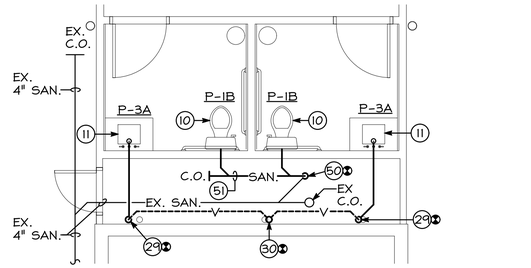

BASEMENT - SANITARY/VENT

SCALE: 1/4"=1'-0"

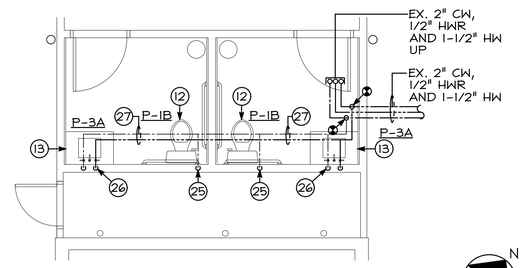

BASEMENT - DOMESTIC WATER

SCALE: 1/4"=1'-0"

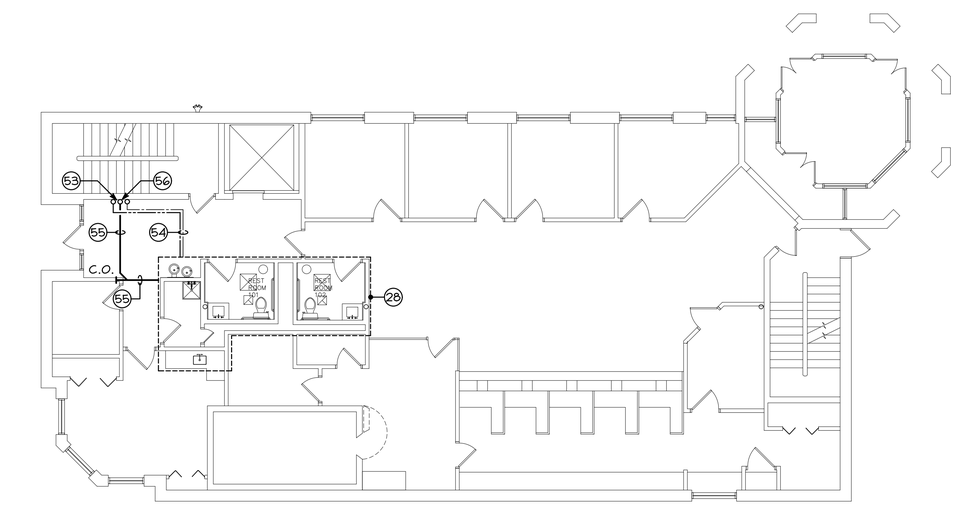

NEW WORK - FIRST FLOOR - MECHANICAL

SCALE: 1/8"=1'-0"

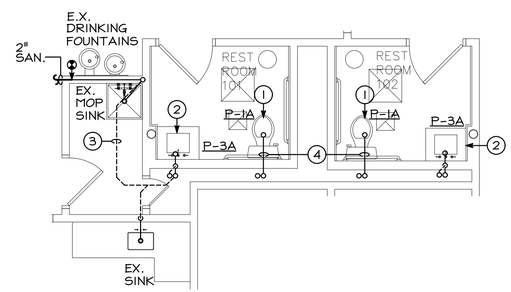

FIRST FLOOR - SANITARY VENT

SCALE: 1/4"=1'-0"

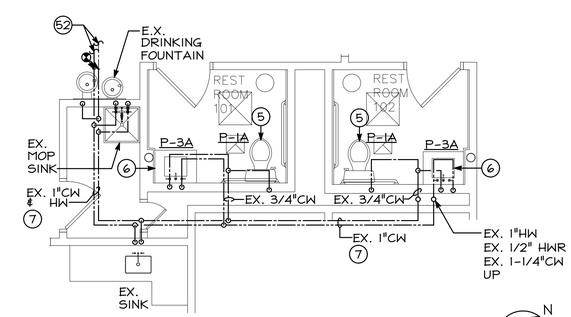

FIRST FLOOR - DOMESTIC WATER

SCALE: 1/4"=1'-0"

DRAWING NOTES

1. INSTALL NEW WATER CLOSET AND WAX RING.
2. INSTALL NEW LAVATORY AND FAUCET. INSTALL NEW SANITARY PIPING AND P-TRAP.
3. EXISTING VENT PIPING SUPPORTED ABOVE CEILING.
4. EXISTING SANITARY PIPING BELOW FLOOR.
5. INSTALL NEW WATER CLOSET AND CW CONNECTION.
6. INSTALL NEW LAVATORY, FAUCET AND NEW CW & HW CONNECTION.
7. EXISTING DOMESTIC WATER PIPING SUPPORTED ABOVE CEILING.
8. EXISTING 10x10 EXHAUST DUCT UP TO EXISTING EXHAUST AIR VENT LOCATED ON ROOF.
9. REFER TO PLUMBING FLOOR PLANS AND RISER DIAGRAMS.
10. INSTALL NEW WATER CLOSET AND ALL ASSOCIATED SANITARY/VENT PIPING.
11. INSTALL NEW LAVATORY AND ALL ASSOCIATED SANITARY/VENT PIPING.
12. INSTALL NEW WATER CLOSET AND ALL ASSOCIATED DOMESTIC WATER PIPING.
13. INSTALL NEW LAVATORY AND ALL ASSOCIATED DOMESTIC WATER PIPING.
14. EXISTING DOMESTIC WATER PIPING SUPPORTED ABOVE CEILING.
15. EXISTING VENT PIPING SUPPORTED ABOVE CEILING.
16. EXISTING SANITARY PIPING BELOW FLOOR.
17. EXISTING 10x6 EXHAUST AIR DUCT UP.
18. CEILING EXHAUST FAN MOUNTED FROM CEILING STRUCTURE ABOVE. REFER TO DETAIL AND SCHEDULE FOR MORE INFORMATION.
19. 150 CFM, 8"Φ NECK, 24x24 SUPPLY AIR DIFFUSER.
20. 75 CFM, 8"Φ NECK, 24x24 SUPPLY AIR DIFFUSER.
21. 90 CFM, 6"Φ NECK, 24x24 SUPPLY AIR DIFFUSER.
22. 125 CFM, 8"Φ NECK, 24x24 SUPPLY AIR DIFFUSER.
23. 180 CFM, 8"Φ NECK, 24x24 SUPPLY AIR DIFFUSER.
24. 55 CFM, 6"Φ NECK, 24x24 SUPPLY AIR DIFFUSER.
25. COORDINATE CW PIPE DOWN IN WALL.
26. COORDINATE CW & HW PIPE DOWN IN WALL.
27. DOMESTIC WATER SUPPORTED FROM STRUCTURE ABOVE.
28. REFER TO PLUMBING PART PLANS LOCATED ON THIS DRAWIING FOR WORK IN THIS AREA.
29. VENT PIPE DOWN IN WALL. CONNECT TO EXISTING VENT PIPE STUBBED UP.
30. EXISTING VENT PIPE UP.
31. 300 CFM, 14"x6" RETURN AIR REGISTER.
32. 75 CFM, 12"x12" RETURN AIR DIFFUSER, 6"Φ NECK.
33. 305 CFM, 24"x24" RETURN AIR DIFFUSER, 10"Φ NECK.
34. 360 CFM, 24"x24" RETURN AIR DIFFUSER, 12"Φ NECK.
35. 140 CFM, 8"x6" RETURN AIR DUCT OPENING WITH 1"x1" WIRE MESH SCREEN OVER OPENING.
36. 320 CFM, 12"x8" RETURN AIR REGISTER.
37. 8"x6" TRANSFER AIR DUCT.
38. 100 CFM, 6"x6" RETURN AIR DUCT OPENING WITH 1"x1" WIRE MESH SCREEN OVER OPENING.
39. OUTSIDE AIR DUCT DN. TO EXISTING AIR HANDLING UNIT.
40. EXISTING REFRIGERANT PIPING FROM AIR HANDLING UNIT TO HEAT PUMP ON ROOF.
41. MANUAL BALANCING DAMPER (TYPICAL).
42. SUPPLY AIR DUCTWORK SUPPORTED FROM STRUCTURE ABOVE (TYPICAL).
43. EXISTING OUTSIDE AIR DUCTWORK SUPPORTED FROM STRUCTURE ABOVE (TYPICAL).
44. EXHAUST AIR DUCTWORK SUPPORTED FROM STRUCTURE ABOVE (TYPICAL).
45. EXISTING WALL MOUNTED THERMOSTAT MOUNTED 48" ABOVE FLOOR AND AND INTERLOCKED WITH UNIT INDICATED.
46. 24"x24" CEILING MOUNTED VANED SUPPLY AIR DIFFUSER WITH NECK SIZE AND AIR QUANTITY INDICATED (TYPICAL).
47. 12"x12" CEILING MOUNTED SUPPLY AIR DIFFUSER WITH NECK SIZE AND AIR QUANTITY INDICATED (TYPICAL).
48. EXISTING AIR HANDLING UNIT NO.3.
49. EXISTING DUCTWORK SUPPORTED FROM STRUCTURE ABOVE (TYPICAL).
50. CONNECT SANITARY PIPE TO EXISTING ROUGH IN LOCATED IN FLOOR. TEST PITT, FIELD VERIFY EXISTING CONDITIONS, PIPE SIZES, INVERT ELEVATION AND FLOW OF DIRECTION BEFORE COMMENCMENT OF WORK.
51. 3" SANITARY PIPE LOCATED ABOVE FLOOR. PROVIDE 2% SLOPE.
52. REFER TO FIRST FLOOR PLAN NEW WORK FOR CONTINUATION.
53. 1/2" CW AND 1/2" HW UP TO KITCHEN SINK. REFER TO SECOND FLOOR NEW WORK PLAN FOR CONTNUATION.
54. DOMESTIC WATER SUPPORTED FROM STRUCTURE ABOVE CEILING.
55. SANITARY PIPE SUPPORTED FROM STRUCTURE ABOVE CEILING.
56. 2" SANITARY PIPE UP TO KITCHEN SINK. REFER TO SECOND FLOOR NEW WORK PLAN FOR CONTNUATION.

0 1 2 3 4 8 12

SCALE:1/4"=1'-0"

0 4 8 16 24

SCALE:1/8"=1'-0"

FARMERS & MERCHANTS BANK
25 WESTMINSTER PIKE
REISTERTOWN, MARYLAND, 21136
INTERIOR ALTERATION

I CERTIFY THAT THESE DOCUMENTS WERE PREPARED OR APPROVED BY ME AND THAT I AM A DULY LICENSED PROFESSIONAL ENGINEER UNDER THE LAWS OF THE STATE OF MARYLAND.

LICENSE NO.: 19994

EXP. DATE: 3/31/2027

THESE DRAWINGS ARE NOT PERMITTED TO BE COPIED OR REPRODUCED, EITHER WHOLLY OR PARTIALLY, UNLESS WRITTEN PERMISSION IS FIRST OBTAINED FROM SANDERS DESIGNS, P.A.

MECHANICAL & ELECTRICAL DESIGN CONSULTANTS, INC.
1901 N. Fountain Green Road
Bel Air, Maryland 21015-1411
410-893-2822 • Fax 410-803-0442
web site: www.jlrdesign.net

SANDERS | DESIGNS
ARCHITECTS PLANNERS
WWW.SANDERSDESIGNS.COM
MAILBOX@SANDERSDESIGNS.COM
9727 GREENSIDE DRIVE, SUITE 202, COCKEYSVILLE, MARYLAND 21030 T: (410) 560 2624

No.	Date	Revision

Project No.:
Date:
Scale:
Edition: PERMIT SET
Drawing Name: NEW WORK FLOOR AND PART PLANS
Drawing Number: M-4

DRAWING NOTES

1. DAISY CHAIN THE CONTROLS FOR ZONE DAMPERS 19 AND 20 SO THEY ARE ARE SERVED BY THE SAME EXISTING THERMOSTAT.
2. EXISTING THERMOSTAT.
3. RELOCATE EXISTING THERMOSTAT SERVING ZONE DAMPER 21.
4. INSTALL NEW WATER CLOSET AND WAX RING. INSTALL NEW SANITARY PIPING AND P-TRAP.
5. INSTALL NEW LAVATORY AND FAUCET. INSTALL NEW SANITARY PIPING AND P-TRAP.
6. INSTALL NEW KITCHEN SINK AND FAUCET. INSTALL NEW SANITARY PIPING AND P-TRAP.
7. EXISTING VENT PIPING SUPPORTED ABOVE CEILING.
8. EXISTING SANITARY PIPING BELOW FLOOR.
9. INSTALL NEW WATER CLOSET AND CW CONNECTION.
10. INSTALL NEW LAVATORY, FAUCET AND NEW CW & HW CONNECTION.
11. INSTALL NEW KITCHEN SINK AND CW & HW CONNECTION.
12. EXISTING DOMESTIC WATER PIPING SUPPORTED ABOVE CEILING.
13. EX. AHU-1 HUNG ABOVE THE CEILING SERVES IT ROOM. EXTERIOR UNIT LOCATED ON THE ROOF.
14. 24"x24" SUPPLY AIR DIFFUSER @ 250 CFM, 10"Φ NECK (TYPICAL OF 3).
15. SPLIT SYSTEM AIR HANDLING UNIT HUNG ABOVE THE CEILING SERVES IT ROOM. EXTERIOR UNIT LOCATED ON THE ROOF.
16. 24"x24" PERFORATED SUPPLY AIR DIFFUSER @ 200 CFM, 8"Φ NECK (TYPICAL OF 4)
17. MOUNT HEAT PUMP ON EQUIPMENT RAILS.
18. SUPPORT RS&RL PIPING ON ROOF (TYPICAL).
19. RS&RL PIPING ROUTED DOWN IN EXISTING PITCH POCKET. ALL ROOF WORK MUST BE PERFORMED BY THE OWNERS ROOFER IN ORDER TO MAINTAIN THE ROOF WARRANTY.
20. 24"x24" PERFORATED RETURN AIR DEVICE.
21. SPLIT SYSTEM AIR HANDLING UNIT SUPPORTED FROM STRUCTURE ABOVE. REFER TO DETAIL AND SCHEDULE FOR MORE INFORMATION.
22. THERMOSTAT MOUNTED 48" A.F.F.
23. EX. 12x12 SUPPLY AIR DUCT SUPPORTED FROM STRUCTURE ABOVE.
24. EX. VAV BOX NO. 15 THERMOSTAT SERVING THIS ROOM.
25. ¾" CONDENSATE DRAIN TRAP.
26. SLOPE CONDESATE DRAIN AT ¼" PER FOOT TO EXISTING ROOF DRAIN.
27. SECURE CONDENSATE DRAIN PIPE TO PIPE SUPPORT BLOCKS (TYPICAL).
28. DISCHARGE CONDENSTAE INTO ROOF DRAIN.
29. ½" CW AND ½" HW UP FROM FIRST FLOOR LOCATED IN WALL. CONNECT TO SINK.
30. DOMESTIC WATER PIPING LOCATED ABOVE CEILING.
31. CW UP FROM FIRST FLOOR CEILING LOCATED IN WALL. CONNECT TO WATER DISPENSER.
32. 2" SANITARY PIPE DOWN TO FIRST FLOOR CEILING. REFER TO NEW WORK PLAN FOR CONTINUATION.
33. 2" VENT PIPE UP TO SECOND FLOOR CEILING.
34. ¾" CONDENSATE PIPED TO STORM WATER PIPE ABOVE CEILING, PROVIDE TRAP AND SLOPE PIPE ⅛" PER FOOT.

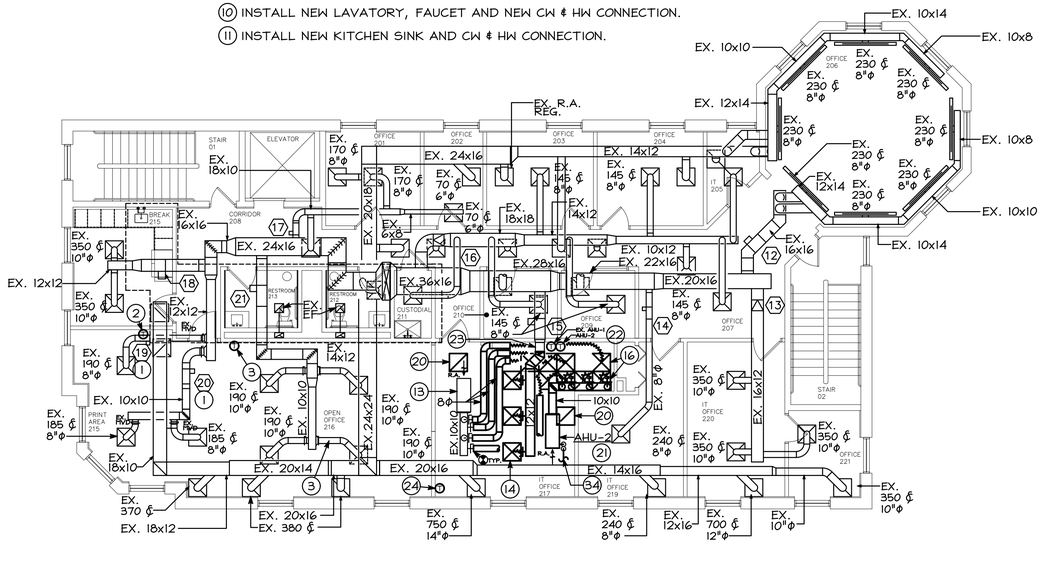

NEW WORK - SECOND FLOOR - MECHANICAL

SCALE: 1/8"=1'-0"

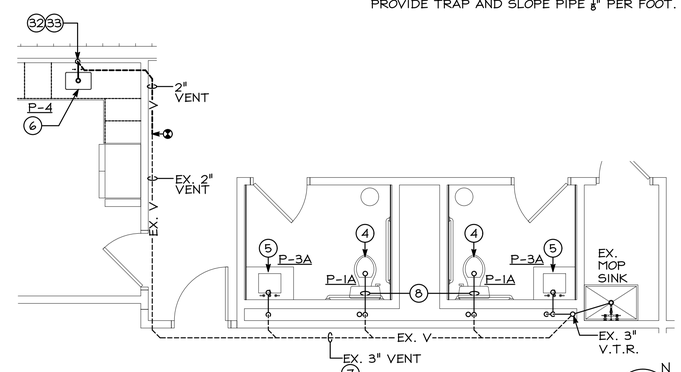

SECOND FLOOR - SANITARY/VENT

SCALE: 1/4"=1'-0"

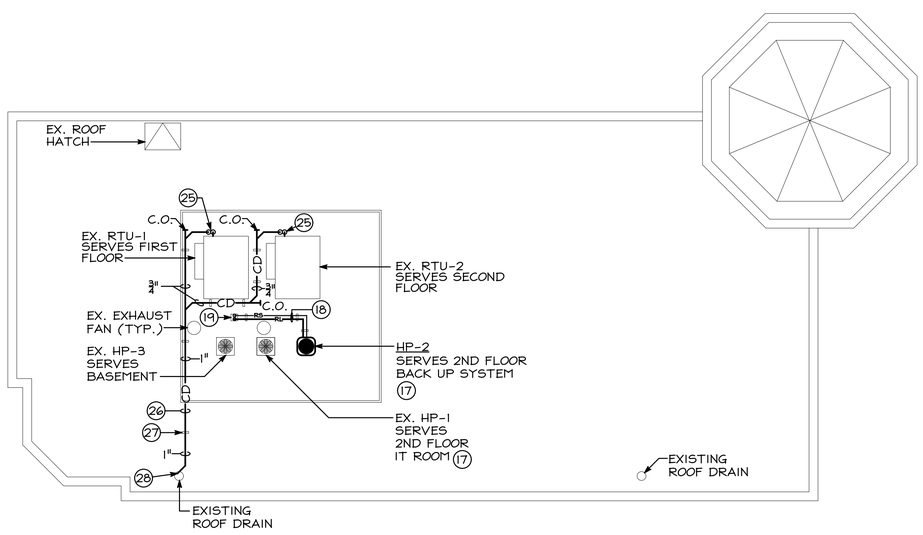

NEW WORK - ROOF PLAN - MECHANICAL

SCALE: 1/8"=1'-0"

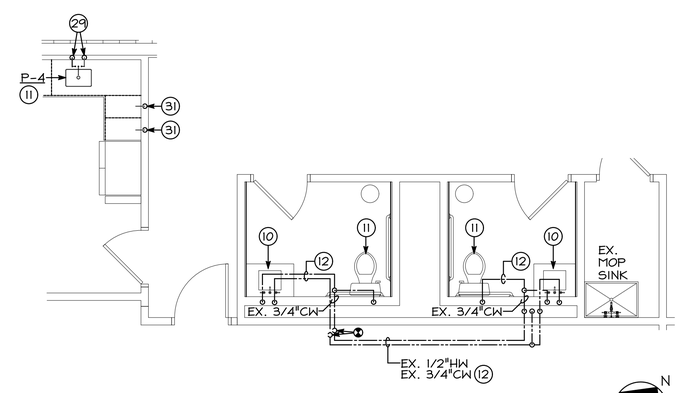

SECOND FLOOR - DOMESTIC WATER

SCALE: 1/4"=1'-0"

0 1 2 3 4 8 12
SCALE:1/4"=1'-0"

0 4 8 16 24
SCALE:1/8"=1'-0"

FARMERS & MERCHANTS BANK
25 WESTMINSTER PIKE
REISTERTOWN, MARYLAND, 21136
INTERIOR ALTERATION

I CERTIFY THAT THESE DOCUMENTS WERE PREPARED OR APPROVED BY ME AND THAT I AM A DULY LICENSED PROFESSIONAL ENGINEER UNDER THE LAWS OF THE STATE OF MARYLAND.

LICENSE NO.: 19994

EXP. DATE: 3/31/2027

THESE DRAWINGS ARE NOT PERMITTED TO BE COPIED OR REPRODUCED, EITHER WHOLLY OR PARTIALLY, UNLESS WRITTEN PERMISSION IS FIRST OBTAINED FROM SANDERS DESIGNS, P.A.

MECHANICAL & ELECTRICAL DESIGN CONSULTANTS, INC.
1901 N. Fountain Green Road
Bel Air, Maryland 21015-1411
410-893-2822 • Fax 410-803-0442
web site: www.jlrdesign.net

SANDERS | DESIGNS
ARCHITECTS PLANNERS
WWW.SANDERSDESIGNS.COM
MAILBOX@SANDERSDESIGNS.COM
9727 GREENSIDE DRIVE, SUITE 202, COCKEYSVILLE, MARYLAND 21030 T: (410) 560 2624

No.	Date	Revision

Project No.:
Date:
Scale:
Edition: PERMIT SET
Drawing Name: NEW WORK FLOOR AND PART PLANS
Drawing Number: M-5

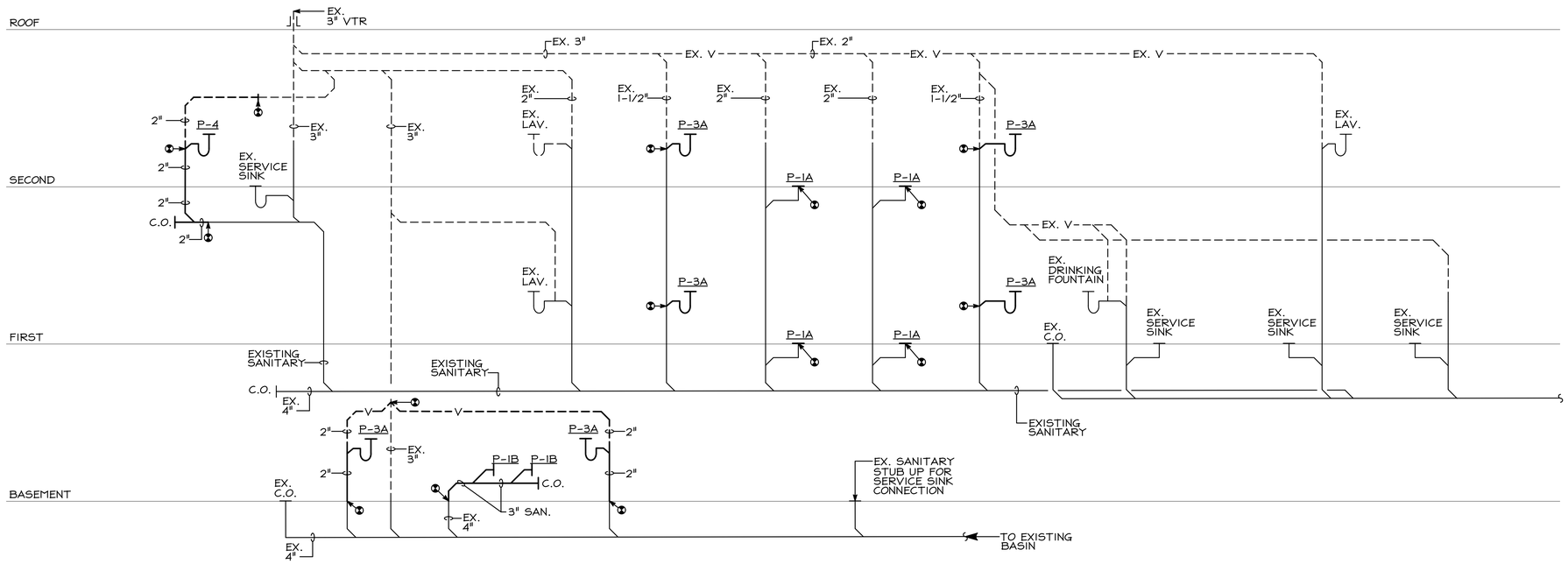

SANITARY/VENT RISER DIAGRAM

NOT TO SCALE

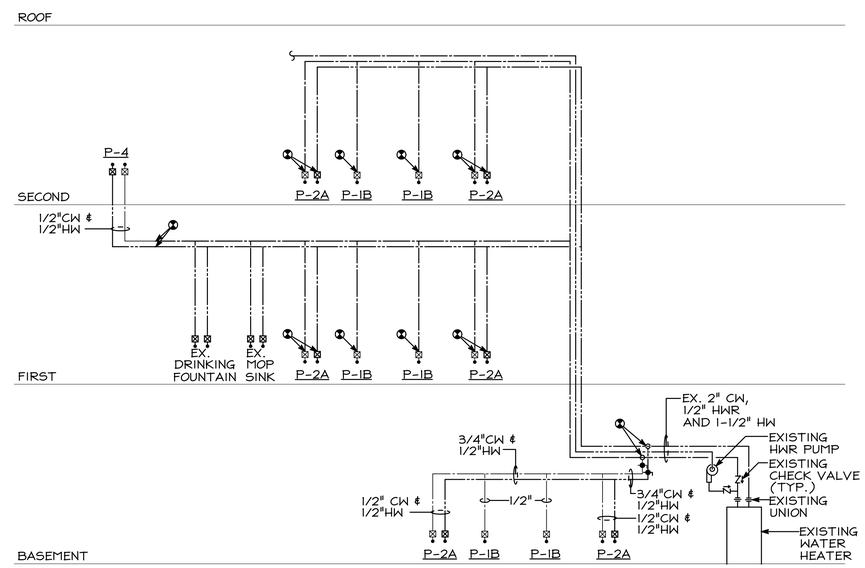

DOMESTIC WATER RISER DIAGRAM

NOT TO SCALE

FARMERS & MERCHANTS BANK

25 WESTMINSTER PIKE
REISTERTOWN, MARYLAND, 21136

INTERIOR ALTERATION

I CERTIFY THAT THESE DOCUMENTS WERE PREPARED OR APPROVED BY ME AND THAT I AM A DULY LICENSED PROFESSIONAL ENGINEER UNDER THE LAWS OF THE STATE OF MARYLAND.

LICENSE NO.: 19994

EXP. DATE: 3/31/2027

THESE DRAWINGS ARE NOT PERMITTED TO BE COPIED OR REPRODUCED, EITHER WHOLLY OR PARTIALLY, UNLESS WRITTEN PERMISSION IS FIRST OBTAINED FROM SANDERS DESIGNS, P.A.

MECHANICAL & ELECTRICAL DESIGN CONSULTANTS, INC.
1901 N. Fountain Green Road
Bel Air, Maryland 21015-1411
410-893-2822 • Fax 410-803-0442
web site: www.jlrdesign.net

SANDERS | DESIGNS
ARCHITECTS PLANNERS
WWW.SANDERSDESIGNS.COM
MAILBOX@SANDERSDESIGNS.COM
9727 GREENSIDE DRIVE, SUITE 202, COCKEYSVILLE, MARYLAND 21030 T: (410) 560 2624

No.	Date	Revision

Project No.:
Date:
Scale:
Edition: PERMIT SET

Drawing Name: **PLUMBING RISER DIAGRAMS**

Drawing Number: M-6

SPLIT SYSTEM HEAT PUMP AIR HANDLING UNIT SCHEDULE

ITEM#	AREA SERVED	FAN DATA					DX COOLING DATA (R454B)					HEAT PUMP HEATING DATA (KW=TOTAL POWER)						INDOOR UNIT					OUTDOOR UNIT					
		C.F.M.	E.S.P.	H.P.	R.P.M.	C.F.M. O.A.	TOTAL BTU/HR.	SENS. BTU/HR.	# COIL ROWS	ENTERING AIR DB°F	ENTERING AIR WB°F	HI-TEMP HEAT 47 O.A.T. BTU/HR.	HI-TEMP HEAT 47 O.A.T. KW	HI-TEMP HEAT 47 O.A.T. C.O.P.	LOW-TEMP HEAT 17 O.A.T. BTU/HR.	LOW-TEMP HEAT 17 O.A.T. KW	LOW-TEMP HEAT 17 O.A.T. C.O.P.	ELECTRICAL DATA	MCA/ MOP	WEIGHT (LBS.)	MANUFACTURER	MODEL #	SEER	ELECTRICAL DATA	MCA/ MOP	WEIGHT (LBS.)	MANUFACTURER	MODEL #
AHU-2/HP-2	IT OFFICE	800	0.5"	1/3	HIGH	0	24,000	17,100	3	80	67	22,800	6.6	4.0	14,700	2.7	2.7	208V/1Φ	5/15	120	TRANE	5TEM4B02AC21SA	14.0	208V/1Φ	15/20	175	TRANE	5TWR4024A1000A

NOTE:
1) CAPACITIES ARE BASED ON 80°F DB/67°F WB ENTERING AIR.

EXISTING ELECTRIC WATER HEATER SCHEDULE

ITEM#	AREA SERVED	NOMINAL TANK SIZE (GAL.)	PIPE CONNECTIONS INLET	PIPE CONNECTIONS OUTLET	K.W. UPPER/ LOWER	ELECTRICAL DATA	MANUFACTURER	MODEL #
EXISTING WATER HEATER	ALL FLOORS	40	3/4"	3/4"	4.5/4.5	208V/1Φ	A.O. SMITH	DEN-40 110

EXHAUST FAN SCHEDULE

ITEM#	AREA SERVED	C.F.M.	SONES	H.P./ WATTS	FAN TYPE	E.S.P.	DRIVE TYPE	R.P.M.	ELECTRICAL DATA	CONTROL	WEIGHT (LBS.)	MANUFACTURER	MODEL #
EF-1	BASEMENT TOILET ROOM	100	3.0	45	CEILING	0.375	DIRECT	1,100	120V-1PH	LIGHT SWITCH	15	COOK	GN-148
EF-2	BASEMENT TOILET ROOM	100	3.0	45	CEILING	0.375	DIRECT	1,100	120V-1PH	LIGHT SWITCH	15	COOK	GN-148

INTERNATIONAL MECHANICAL VENTILATION CODE

SPACE NAME	SQ.FT. (Az)	AREA OUTDOOR AIR RATE (Ra) table 403.3 CFM/ SQ.FT.	AREA OUTDOOR AIR (RaAz)	OCCUPANT LOAD RATE table 403.3 #PEOPLE/ 1,000 SQ.FT	TOTAL # OF PEOPLE (Pz)	OCCUPANT OUTDOOR AIR RATE (Rp) table 403.3 CFM/ PERSON	OCCUPANT OUTDOOR AIR (RpPz)	BREATHING ZONE OUTDOOR AIR (Vbz) =RpPz+RaAz	ZONE AIR DISTRIBUTION EFFECTIVENESS (Ez) table 403.3.1.2 (FACTOR)	ZONE OUTDOOR AIR (Voz) =Vbz/Ez	TOTAL "SUPPLY" AIR TO SPACE (Vpz)	OUTDOOR AIR FRACTION (Zp) =Voz/Vpz
215 Print Area	255	.06	15.3	5	1	5	6.4	21.7	0.8	27.1	375	0.07
216 Open Office	415	.06	24.9	5	2	5	10.4	35.3	0.8	44.1	760	0.06
209 Office	65	.06	3.9	5	0	5	1.6	5.5	0.8	6.9	145	0.05
210 Office	65	.06	3.9	5	0	5	1.6	5.5	0.8	6.9	145	0.05
TOTALS=	800		48.0		4		20.0	68.0		85.0	1,425	

Vot=Voz = 85

TOTAL REQUIRED OUTDOOR AIR FOR "MULTI-ZONE SYSTEM" BASED ON OCCUPANT DIVERSITY = 1

table 403.3.2.3.2
Ev = 1

SYSTEM VENTILATION EFFICIENCY (Ev) [based on max. (Zp)]

Vot=Vbz/Ev = 70

TOTAL REQUIRED OUTDOOR AIR FOR "SINGLE-ZONE SYSTEM"

EXISTING SPLIT SYSTEM HEAT PUMP SCHEDULE

ITEM#	AREA SERVED	FAN DATA C.F.M.	FAN DATA OUTSIDE AIR	FAN DATA H.P.	FAN DATA E.S.P.	COOLING DATA (BTUH) TOTAL	COOLING DATA ENTERING AIR DB°F	COOLING DATA ENTERING AIR WB°F	HEATING DATA (BTUH) INPUT	INTERIOR MODEL #	EXTERIOR MODEL #
EX. AHU-1/EX. HP-1	IT ROOM	800	-	1/3	0.375"	24,000	80	67	22,800	TRANE 5TEM4B02	TRANE 5TWR4024
EX. AHU-3/EX. HP-3	BASEMENT	1,600	470	3/4	0.50"	48,000	80	67	34,120	CARRIER FB4A-048	CARRIER 38YCKC48

PLUMBING FIXTURE SCHEDULE

ITEM#	DESCRIPTION	PIPE SIZES C.W.	PIPE SIZES H.W.	PIPE SIZES SAN.	PIPE SIZES VENT	TRAP TYPE	REMARKS
P-1A	WATERCLOSET (FLUSH VALVE)	1/2"		4"	2"	INTEGRAL	HANDICAPPED
P-3A	COUNTERTOP LAVATORY	1/2"	1/2"	2"	2"	"P"	HANDICAPPED
P-4	KITCHEN SINK	1/2"	1/2"	2"	2"	"P"	

EXISTING GAS FIRED ROOFTOP UNIT SCHEDULE

ITEM#	AREA SERVED	FAN DATA C.F.M.	FAN DATA OUTSIDE AIR	FAN DATA H.P.	FAN DATA E.S.P.	COOLING DATA (BTUH) TOTAL	COOLING DATA ENTERING AIR DB°F	COOLING DATA ENTERING AIR WB°F	HEATING DATA (BTUH) INPUT	HEATING DATA (BTUH) TEMP. RISE °F	MODEL #
EX. RTU-1	FIRST FLOOR	5,500	680	1.0	0.80"	184,600	77.5	64.8	275,000	37.5	48HJD017
EX. RTU-2	SECOND FLOOR	6,900	440	1.0	0.55"	189,000	76.3	63.8	275,000	29.9	48HJD017

INTERNATIONAL MECHANICAL VENTILATION CODE

SPACE NAME	SQ.FT. (Az)	AREA OUTDOOR AIR RATE (Ra) table 403.3 CFM/ SQ.FT.	AREA OUTDOOR AIR (RaAz)	OCCUPANT LOAD RATE table 403.3 #PEOPLE/ 1,000 SQ.FT	TOTAL # OF PEOPLE (Pz)	OCCUPANT OUTDOOR AIR RATE (Rp) table 403.3 CFM/ PERSON	OCCUPANT OUTDOOR AIR (RpPz)	BREATHING ZONE OUTDOOR AIR (Vbz) =RpPz+RaAz	ZONE AIR DISTRIBUTION EFFECTIVENESS (Ez) table 403.3.1.2 (FACTOR)	ZONE OUTDOOR AIR (Voz) =Vbz/Ez	TOTAL "SUPPLY" AIR TO SPACE (Vpz)	OUTDOOR AIR FRACTION (Zp) =Voz/Vpz
001 Storage	55	.12	6.6	0	0	0	0.0	6.6	0.8	8.2	100	0.08
003 Lounge	620	.06	37.2	10	6	5	31.0	68.2	0.8	85.3	305	0.28
005 Utility	120	.06	7.2	10	1	5	6.0	13.2	0.8	16.5	140	0.12
006 Conference Room	500	.06	30.0	50	25	5	125.0	155.0	0.8	193.8	360	0.54
007 Restroom	55	0	0.0	0	0	0	0.0	0.0	0.8	0.0	0	####
008 Restroom	55	0	0.0	0	0	0	0.0	0.0	0.8	0.0	0	####
009 Secure Storage	475	.12	57.0	0	0	0	0.0	57.0	0.8	71.2	180	0.40
010 Secure Storage	135	.12	16.2	0	0	0	0.0	16.2	0.8	20.2	140	0.14
011 Work Space	480	.06	28.8	5	2	5	12.0	40.8	0.8	51.0	300	0.17
012 Corridor	310	.06	18.6	0	0	0	0.0	18.6	0.8	23.3	75	0.31
TOTALS=	2,805		201.6		35		174.0	375.6		469.5	1,600	

Vot=Voz = 470

TOTAL REQUIRED OUTDOOR AIR FOR "MULTI-ZONE SYSTEM" BASED ON OCCUPANT DIVERSITY = 1

table 403.3.2.3.2
Ev = 1

SYSTEM VENTILATION EFFICIENCY (Ev) [based on max. (Zp)]

Vot=Vbz/Ev = 380

TOTAL REQUIRED OUTDOOR AIR FOR "SINGLE-ZONE SYSTEM"

EXISTING SCHEDULE VARIABLE AIR ZONE DAMPERS

ITEM#	COOLING DATA MAX. C.F.M.	COOLING DATA MAX. F.P.M.	P.D. IN H^2O	INLET AREA SQ.FT.	DAMPER SIZE	MANUFACTURER	MODEL #
1	544	700	0.02	0.79	12"Φ	CARRIER	ZD12
2	320	700	0.02	0.55	10"Φ	CARRIER	ZD10
3	675	700	0.02	1.07	14"Φ	CARRIER	ZD14
4	1000	714	0.02	1.40	16"Φ	CARRIER	ZD16
5	550	700	0.02	0.79	12"Φ	CARRIER	ZD12
6	640	700	0.02	1.07	14"Φ	CARRIER	ZD14
7	295	700	0.02	0.55	10"Φ	CARRIER	ZD10
8	560	700	0.02	0.78	14"x8"	CARRIER	RD0814
9	745	600	0.02	1.07	14"Φ	CARRIER	ZD14
10	2745	1500	0.02	2.0	18"x16"	RUSKIN	-
11	2745	1500	0.02	2.0	18"x16"	RUSKIN	-
12	900	700	0.02	1.4	16"Φ	CARRIER	ZD16
13	1050	700	0.02	1.5	16"x14"	RUSKIN	-
14	240	700	0.02	0.35	8"Φ	CARRIER	ZD08
15	750	700	0.02	1.07	16"Φ	CARRIER	ZD14
16	1150	700	0.02	1.64	18"x14"	RUSKIN	-
17	640	700	0.02	0.35	8"Φ	CARRIER	ZD08
18	700	600	0.02	1.4	16"Φ	CARRIER	ZD16
19	190	600	0.02	0.35	8"Φ	CARRIER	ZD08
20	370	700	0.02	0.55	10"Φ	CARRIER	ZD10
21	760	700	0.02	1.07	14"Φ	CARRIER	ZD14
22	6900	1500	0.02	4.6	36"x18"	RUSKIN	-

FARMERS & MERCHANTS BANK
25 WESTMINSTER PIKE
REISTERTOWN, MARYLAND, 21136
INTERIOR ALTERATION

9.30.26

I CERTIFY THAT THESE DOCUMENTS WERE PREPARED OR APPROVED BY ME AND THAT I AM A DULY LICENSED PROFESSIONAL ENGINEER UNDER THE LAWS OF THE STATE OF MARYLAND.

LICENSE NO.: 19994

EXP. DATE: 3/31/2027

THESE DRAWINGS ARE NOT PERMITTED TO BE COPIED OR REPRODUCED, EITHER WHOLLY OR PARTIALLY, UNLESS WRITTEN PERMISSION IS FIRST OBTAINED FROM SANDERS DESIGNS, P.A.

MECHANICAL & ELECTRICAL DESIGN CONSULTANTS, INC.
1901 N. Fountain Green Road
Bel Air, Maryland 21015-1411
410-893-2822 • Fax 410-803-0442
web site: www.jlrdesign.net

SANDERS | DESIGNS
ARCHITECTS PLANNERS
MAILBOX@SANDERSDESIGNS.COM
WWW.SANDERSDESIGNS.COM T: (410) 560 2624
9727 GREENSIDE DRIVE, SUITE 202, COCKEYSVILLE, MARYLAND 21030

No.	Date	Revision

Project No.:
Date:
Scale:
Edition: PERMIT SET
Drawing Name: MECHANICAL SCHEDULES
Drawing Number: M-7

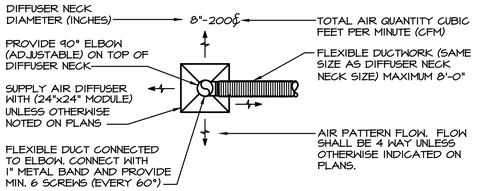

SUPPLY AIR DIFFUSER KEY

NO SCALE

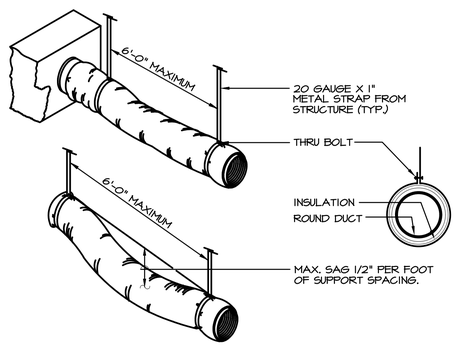

FLEXIBLE DUCT RUN-OUT SUPPORT DETAIL

NO SCALE

NOTES:

1) FLEXIBLE DUCT SHOULD EXTEND STRAIGHT FOR SEVERAL INCHES FROM RECTANGULAR DUCT CONNECTION BEFORE BENDING.

2) USE RIGID DUCTWORK WHEN FLEXIBLE DUCT LENGTH EXCEEDS 8'-0" IN LENGTH.

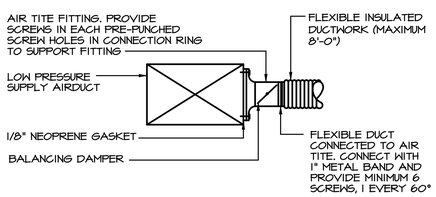

AIR TITE FITTING DETAIL

NO SCALE

AIR TITE SIZE CHART			
DUCTSIZE	CONNECTION RING	DUCTSIZE	CONNECTION RING
5"	8"	9"	12"
6"	9"	10"	13"
7"	10"	11"	15"
8"	11"	12"	17"

NOTE:
WHERE CONNECTION RING SIZE IS LARGER THAN SUPPLY DUCT, THEN CONNECTION RING SHALL BE CRIMPED OVER DUCT AND CONNECTED, SCREWED & SEALED ON TOP AND BOTTOM OF SUPPLY DUCT.

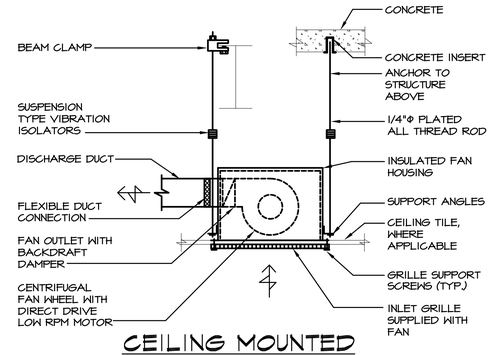

CEILING MOUNTED EXHAUST FAN DETAIL

NO SCALE

NOTE:
PROVIDE VARIABLE SPEED SWITCH ON THE SIDE OF THE CASING FOR FINAL AIR BALANCE.

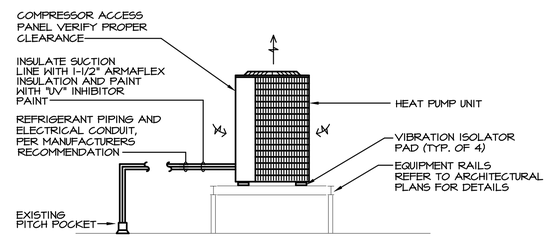

ROOF MOUNTED HEAT PUMP DETAIL

NO SCALE

NOTES:

1) COORDINATE EXACT LOCATION OF "NEW" HEAT PUMP UNIT WITH "EXISTING" UNITS ON EXISTING EQUIPMENT FRAMING AND MAINTAIN PROPER CLEARANCE AROUND EACH UNIT PER MANUFACTURER'S RECOMMENDATIONS.
2) TRAP AND SIZE REFRIGERANT PIPING PER MANUFACTURE'S RECOMMENDATIONS.
3) PROVIDE CROSS BRACING SUPPORT AS REQUIRED.

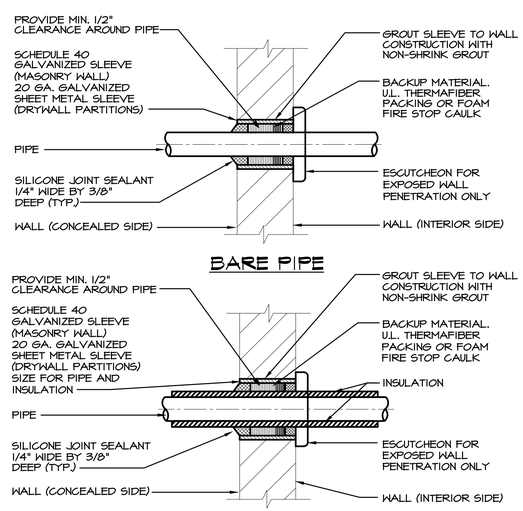

PIPE SLEEVE THRU WALL DETAIL

NO SCALE

NOTES:

1) AT THE CONTRACTORS' OPTION A U.L. LISTED/APPROVED FIRE STOP PIPE SLEEVE ASSEMBLY MAY BE SUBMITTED FOR APPROVAL.

2) FOR EXISTING POURED CONCRETED WALLS, CORE DRILL OR STAR DRILL OPENING THRU EXISTING WALL FOR PIPE SLEEVES AS DIRECTED.

3) GALVANIZED SLEEVE SHALL BE CAST INTO NEW CONCRETE WALL POURS.

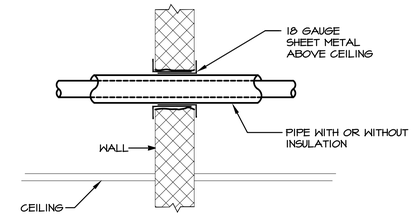

PIPE PENETRATION THRU WALL ABOVE CEILING

NO SCALE

NOTES:

1) TYPICAL FOR NON-INSULATED PIPE AND CONDUIT.
2) TYPICAL FOR MASONRY, CONCRETE OR DRYWALL WALL.
3) FIRE RATED WALLS MUST BE SEALED WITH APPROPRIATE FIRE RETARDED CAULKING.

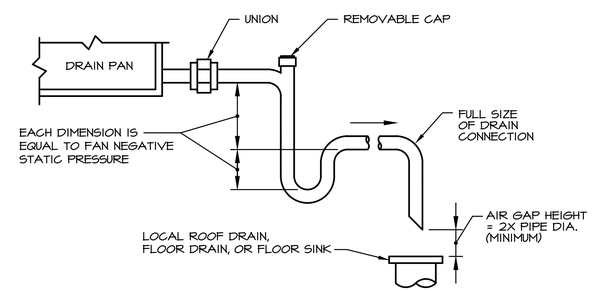

CONDENSATE DRAIN DETAIL

NO SCALE

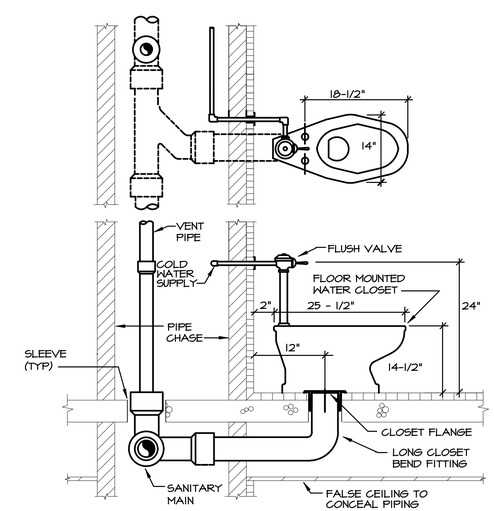

FLOOR MOUNTED WATER CLOSET

NO SCALE

FARMERS & MERCHANTS BANK
25 WESTMINSTER PIKE
REISTERTOWN, MARYLAND, 21136
INTERIOR ALTERATION

I CERTIFY THAT THESE DOCUMENTS WERE PREPARED OR APPROVED BY ME AND THAT I AM A DULY LICENSED PROFESSIONAL ENGINEER UNDER THE LAWS OF THE STATE OF MARYLAND.

LICENSE NO.: 19994

EXP. DATE: 3/31/2027

THESE DRAWINGS ARE NOT PERMITTED TO BE COPIED OR REPRODUCED, EITHER WHOLLY OR PARTIALLY, UNLESS WRITTEN PERMISSION IS FIRST OBTAINED FROM SANDERS DESIGNS, P.A.

MECHANICAL & ELECTRICAL DESIGN CONSULTANTS, INC.
1901 N. Fountain Green Road
Bel Air, Maryland 21015-1411
410-893-2822 • Fax 410-803-0442
web site: www.jlrdesign.net

SANDERS | DESIGNS
ARCHITECTS PLANNERS
WWW.SANDERSDESIGNS.COM
MAILBOX@SANDERSDESIGNS.COM
9727 GREENSIDE DRIVE, SUITE 202, COCKEYSVILLE, MARYLAND 21030 T: (410) 560 2624

No.	Date	Revision

Project No.:
Date:
Scale:
Edition:
PERMIT SET
Drawing Name:
MECHANICAL DETAILS
Drawing Number:
M-8

MECHANICAL SPECIFICATIONS

1. SECTION 15010 - BASIC MECHANICAL REQUIREMENTS

A. The work of each of the mechanical sections includes furnishing and installing the material, equipment and systems complete as specified and/or indicated on the drawings. The mechanical installations, when finished, shall be complete and coordinated, ready for satisfactory service.

B. All work under this contract shall be done in strict accordance with all applicable municipal, state, Baltimore County, NFPA, International and local codes that govern each particular trade.

C. The contractor shall make applications and pay all charges for all necessary permits, licenses and inspections as required under the above codes. Upon completion of the work, the customary certifications of approval shall be furnished.

D. No materials or equipment shall be used in the work until approved. Before submission of the shop drawings, and not more than thirty(30) days after award of the contract, the contractor shall submit for approval a complete list of materials and equipment which he intends to furnish, giving manufacturer and catalog numbers. A complete list of proposed sub-contractors shall also be submitted.

E. The contractor shall examine all drawings and specifications and shall inspect the existing conditions of the site. Failure to comply with this requirement will not relieve the contractor of responsibility for complying with the intent of the contract documents.

F. The drawings indicate the general arrangement of the mechanical installations. Details of proposed departures due to actual field conditions or other causes shall be submitted for approval prior to installation. Reworking of completed items due to improper field coordination shall be at the contractor's expense.

G. Provide sufficient access and clearance for all items of equipment requiring servicing and maintenance, such as valves, dampers, controls, drives, drains, vents, starters, switches, filters, traps and major items of equipment.

H. The contractor shall perform all necessary cutting and patching as required to complete the installation of the mechanical work. Patching of walls, floors, ceilings, roof, etc. shall match the adjacent surfaces.

I. The contractor shall prepare three (3) copies of a record and information booklet. The booklet shall be bound in a three ring loose-leaf binder. Provide the following data in the booklet.

1) Catalog data on each piece of equipment furnished
2) Approved shop drawings on each piece of equipment furnished
3) Maintenance, operation and lubrication instruction on each piece of equipment furnished
4) Simplified temperature control diagram
5) Manufacturer's and contractor's guarantees
6) Air and water balancing reports
7) Commissioning reports
8) Schedule/description of all service work/maintenance inspections required by the paragraphs of this section

J. The entire new plumbing system shall be tested hydrostatically before insulation covering is applied and proved tight under the following gauge pressures:

Sanitary piping .... as specified below
Domestic water piping .... 100 psig
Refrigeration liquid and suction piping .... 225/400 psig
Fire protection piping .... Per NFPA

K. All soil, waste and vent piping shall be tested by the contractor. The entire new drainage system and venting system shall have all necessary openings plugged and filled with water to the level of ten (10) feet above the main or branch being tested. The system shall hold this water for thirty (30) minutes without showing a drop greater than four (4) inches.

Note: If any code or authority requires testing which is different than the test listed above, the more stringent test shall be performed.

L. All parts of the heating, ventilating, air conditioning and exhaust systems shall be adjusted, checked, balanced and tested by an independent A.A.B.C. certified testing and balancing contractor approved by the owner. The contractor shall put all systems and equipment into full operation, and shall test and balance all devices to within ten (10) percent of capacities indicated on the drawings. Submit copies of the balancing reports as required by the contract.Permanently mark the position of each balancing damper.

M. Upon completion of the mechanical installations, the contractor shall provide a complete set of prints of the mechanical contract drawings which shall be legibly marked in red pencil to show all changes and departures of the installation as compared with the original design. They shall be suitable for use in preparation of record drawings.

N. All piping and valve systems shall be identified with labels and tags. Materials shall be as manufactured by Seton name plate corporation.

O. All new mechanical installations, including all materials and labor shall be guaranteed for a period of one (1) year from date of owner acceptance. The above shall not in any way void or abrogate equipment manufacturer's guarantee or warranty. Certificates of guarantee shall be delivered to the owner.

P. Contractor shall also provide one (1) year free service to keep the equipment in operating condition. This service shall be provided per the following schedule and rendered upon request when notified of any equipment malfunction.

Q. In addition to the first year warranty period, the contractor shall provide, at no additional cost to the owner, a minimum of four (4) service calls and maintenance inspections. A complete outline of the required maintenance and the proposed schedule shall be included in the "record and information booklet" detailed in Section 15010-Basic Mechanical Requirements, paragraph 1, for review and acceptance by the owner/representative and engineer. The inspections are to be performed at three (3) month intervals for a total of four (4) service calls and inspections during the first year warranty period [three (3) times during the year plus the original system start-up commissioning. The service work and inspections shall include, but not be limited to the following:

- Replace all disposable air filters;
- Clean all permanent air filters;
- Lubricate all motor and fan bearings as required;
- Clean drain pans and drain lines;
- Check and tighten all electrical connections;
- Inspect all belts for adjustment and condition and replace as required;
- Inspect and clean all water strainers;
- Check operating pressures and refrigerant charge;
- Inspect all controls for correct operation and calibrate as required;
- Perform all maintenance as outlined in the equipment manufacturers operation and maintenance manuals.

Upon completion of each scheduled inspection, the contractor shall deliver to the building owner/owner's representative within (48) hours of completion, two (2) copies the completed inspection report for record purposes.

R. The mechanical or service contractor shall, at the ninth month, advise the owner of the termination date of the above service. This contractor shall also provide the owner with a detailed proposal, reflecting annual escalation, for the continuation of the service and inspections described above.

2. SECTION 15050 - BASIC MECHANICAL PIPING MATERIAL & METHODS

A. Provide all labor and materials necessary to furnish and install all piping systems on this project, including interior storm, sanitary, sanitary vent, domestic water, condensate drainage, heating water, chilled water, condenser water, steam, steam condensate, natural gas, refrigerant and medical gas piping systems.

B. Piping and valves shall be as follows:

1) Storm and sanitary drains and sanitary vents above floor inside building:

Piping: Cast iron no-hub soil pipe and/or schedule 40 galvanized steel pipe and/or type DWV copper.

Fittings: Cast iron no-hub soil pipe fittings and/or galvanized drainage fittings and/or copper solder joint cast drainage fittings.

Joints: No-hub stainless steel gasketed fittings and/or solvent sealer and/or solder type wrought copper.

- OR -

Piping: Schedule 40 PVC DWV pipe.

Fittings: Solvent weld joints.

** Sanitary piping located above food prep/storage/display, serving or dining areas shall be copper piping with soldered connections. Any water closets located on floor above these same areas shall be wall mounted fixtures.

2) Domestic hot and cold water piping inside building:

Piping: All water pipings shall be hard copper, type L above ground, type K below ground.

Fittings: Lead free solder type wrought copper.

Gate Valves: 2-1/2" or 3"= 150 psi, union bonnet, rising stem,solid wedge, bronze body, bonnet and stem. Nibco S-134.

Ball Valves: 2" or smaller= 150 psi, two piece body, full port, blowout-proof stem, chrome plated ball, bronze body and stem, reinforced TFE seat ring. Nibco S-585-70.

Unions: 125 psi., wrought copper, ground joint solder ends.

3) T&P relief piping:
Piping: type DWV seamless copper tubing

Fittings: wrought copper solder drainage fittings

4) Atmospheric condensate and indirect waste:

Piping: 1-1/4" or smaller= type DWV seamless copper tubing or schedule 40 plastic pipe. 2" or larger= schedule 40 plastic pipe.

Fittings: 1-1/4" or smaller= wrought copper solder drainage fittings or solvent sealed plastic fittings. 2" or larger= solvent sealed plastic fittings.

** All indirect waste lines shall be bolted to wall/floor with supports and flanges.

** All indirect waste piping greater then 24" in horizontal developed length or 48" in total developed length shall be provided with trap at equipment drain connection.

5) Refrigerant piping:

Piping: Type L hard copper refrigerant tube, dehydrated and sealed.

Fittings: Wrought copper solder type with silfos.

6) Fire protection: Piping and fittings as required by N.F.P.A. regulations and as hereinafter specified.

3. SECTION 15250 - MECHANICAL INSULATION

A. All supply, return, make-up air, outside air ductwork and all storm water, domestic water, chilled water, heating water, dual temperature water and steam and steam condensate piping systems shall be insulated with fiberglass insulation.

B. Ductwork shall be wrapped with nominal 2" thick glass fiber blanket insulation with thermal conductivity 'K' value of 0.27 at 75°F mean temperature and "installed" thermal resistance 'R' value of 8.0 at 1-1/2" compressed/installed thickness. Owens Corning "SOFTR" fiberglass type 150 with foil faced vapor barrier. Insulation shall be neatly installed and suitable for 40°F-250°F duct temperatures.

C. Pipe insulation shall be premolded fiberglass insulation with an all service jacket, Owens Corning fiberglass SSL-II. Fittings shall be insulated and covered with PVC covers. All piping 1-1/4" and smaller shall have 1" of insulation and all piping between 1-1/2" and 3-1/2" shall have 1-1/2" of insulation.

D. All refrigerant piping shall be wrapped with 1-1/2" armaflex insulation. Insulation exposed to the weather shall be protected from damage, including that caused by sunlight, moisture, equipment maintenance and wind, and shall have shielding from solar radiation that can cause degradation of material. Adhesive tape shall not be permitted.

E. (per 2021 IECC) All refrigerant suction piping (compressor outdoor) shall have 1" of insulation and all suction piping (compressor indoors) shall have 1-1/2" insulation. Liquid line piping shall not require insulation.

F. Interior duct lining shall be as specified under section 15880.

4. SECTION 15300 - FIRE PROTECTION

A. All work, materials, equipment and accessories shall comply with the standards of the National Fire Protection Association and all state and local regulations. System shall be in accordance with NFPA 13 for sprinkler design, NFPA 13 for general storage protection and NFPA 13 for rack storage.

B. Under the existing/new addition design the plumbing contractor shall coordinate the incoming combination water system and split inside the building. The plumbing contractor shall install the OS&Y valves and a double U.L. double check valve/backflow preventer. The final rough in from the plumber for the sprinkler contractor shall be a flanged/capped connection in the sprinkler room.

C. Install a new wet pipe sprinkler system to properly cover/protect the new architectural design. System shall generally be light hazard, except ordinary hazard in all storage rooms, electrical rooms, etc. The sprinkler contractor shall extend the wet pipe sprinkler system from stub, to properly cover/protect entire building. Final density flow per square foot shall be determined by fire marshal.

D. The new installation shall include, but are not limited to valves, flow switches, sprinkler heads and escutcheons, piping, fittings, hangers,signs and other identification markings, as required.

E. The sprinkler contractor shall carefully examine all documents during the bidding period. He shall familiarize himself with project conditions such as building construction, pipe and ductwork locations and elevations.

F. All new sprinkler heads shall be as required per NFPA 13. Sprinkler heads shall be installed to properly cover and protect the entire building. Any sprinkler heads installed in finished ceilings shall be brushed chrome semi recessed type. All heads in open structure or bay areas with no ceiling shall be bronze upright type.

G. The sprinkler contractor shall arrange for approval of the new sprinkler systems and conduct tests in accordance with NFPA 13.

H. The sprinkler contractor shall provide a detailed shop drawing showing piping layout, head locations, elevations and coordination with all building structure, electrical and plumbing trades. The contractor shall submit detailed sprinkler shop drawings with actual heads for architect approval prior to any fabrication.

I. The sprinkler contractor must submit one sepia of sprinkler shop drawings and hydraulic calculations to the local county fire marshal and/or fire department.

J. The sprinkler contractor shall apply for and obtain a county permit for the work. The permit submittals usually include three copies of shop drawings, hydraulic calculations and catalog documentation of sprinklers and other system components.

5. SECTION 15400 - PLUMBING

A. The work covered by this section of the specifications consists of furnishing all labor, equipment and materials in connection with the rough-in, final setting and connections to all plumbing fixtures. The contractor shall carefully review the conditions at the site and all of the contract drawings to determine the extent of the new and renovation plumbing work required.

B. All plumbing fixtures shall be complete in every detail with all trimmings and connections. All fixtures shall be designed to prevent the backflow of polluted water or waste into the water supply system. Fixtures shall be as listed below or approved equal:

P-1A Water Closet (handicapped): American Standard #2467.100.020 Cadet, floor mounted, bottom outlet, elongated rim bowl, 1.1 GPF with vitreous china construction, 2" trapway, 16-5/8" high, pressure-assisted EcoFlush technology, trim bolt caps, closet flange, 12" rough-in, Church open front white seat with cover, rigid supply with angle stop valve. Tank mounted flush handle must be on the side of the ADA turning radius.

P-1B Water Closet (handicapped): kohler #K-3578
floor mounted, rear outlet, elongated rim bowl, 1.0 GPF with vitreous china construction, 2" trapway, 16-5/8" high, flush mate technology, trim bolt caps, closet flange, 12" rough-in, Church open front white seat with cover, rigid supply with angle stop valve. Tank mounted flush handle must be on the side of the ADA turning radius.

P-3A Counter Top Lavatory (handicapped): Formica Everform Model #1513 Acrylic undermount single bowl rectangular vanity sink.
Acrylic white finish. 7-1/6" deep x 16-3/4"Length x 14-15/16" Width
Provide escutcheons, chrome tailpiece, offset "P" trap and trap nipple.
Provide Moen #4925 "Chateau" 4" center set lavatory faucet with lever handles, brushed chrome finish plated deck mounted faucet with 1.2 gpm flow rate.
Provide ASSE 1070 listed thermostatic mixing valve with optional thermal gauge.

P-4 Kitchen Sink (handicapped): Elkay #ECTSRAD33226TBG "Crosstown" double compartment with 18 gauge, type 304 stainless steel, self-rimming, 4 hole, with undercoating, 33"x22"x6" overall size. Sink shall be fitted with Elkay #LK1001CR faucet with ADA single lever handle, swing spout and side spray. Sink shall be complete with crumb cup strainer, rigid supplies with loose key stops, cast brass clean out, tubing to wall and escutcheons.

C. Undersink thermostatic mixing valve shall be Nibco H-77211W-TG or approved equal with ASSE1070 listing. Valve shall have lead free bronze body construction with adjustment cap, internal check valves, temperature gauge, and complete with 3/8" compression, elbow, and tee fittings. Temperature setting range shall be 80°F-120°F with a flow range of 0.5-2.5 gpm.

D. Potable water systems shall be disinfected prior to use. The method to be followed shall be that prescribed by the health authority and code requirements.

6. SECTION 15500 - HEATING, VENTILATING & AIR CONDITIONING (HVAC)

A. The work to be performed shall include all labor, materials and equipment necessary to furnish and install complete, all H.V.A.C. mechanical equipment as shown on drawings and/or hereinafter specified. It is the intent that the systems be installed complete with all items necessary to provide satisfactory service.

B. All heating, ventilating and air conditioning equipment which contains compressors shall be provided with extended warranties covering the compressors for a minimum of four (4) years.

Air Cooled Heat Pump Unit:

Unit shall be outdoor mounted, air cooled, split system heat pump unit suitable for roof or grade installation. Unit shall consist of a hermetic compressor, an air cooled coil, propeller type condenser fan and a control box and shall discharge supply air as shown on the drawings. Unit shall be used in a refrigerant circuit to match up to a packaged fan coil or coil unit.

Unit shall be rated in accordance with the latest edition of ARI standard 210 and 270 and shall be certified for capacity, efficiency and sound. Unit shall also be listed in the latest ARI directory.

Unit construction shall comply with latest edition of ANSI/ASHRAE and with NEC. The Unit shall be constructed in accordance with U.L. standards and shall carry the U.L. label of approval. Unit cabinet shall be capable of withstanding Federal Test Method Standard No. 141(method 6061) 500-hour salt spray test. Air cooled condenser coils shall be leak tested at 150 psig and pressure tested at 300 psig.

Unit shall be factory assembled, single piece, air cooled air conditioner unit, contained within the unit enclosure is all factory wiring, piping, control compressor, refrigerant charge (R-410A) and special features required prior to field start-up.

Unit cabinet shall be constructed of galvanized steel, bonderized and coated with a powder coat paint. Condenser fan shall be direct drive propeller type, discharging air upward. Condenser fan motors shall be totally enclosed with class B insulation and permanently lubricated bearings. Shafts will be corrosion resistant. Fan blades shall be statically and dynamically balanced. Condenser fan openings shall be equipped with PVC coated steel wire safety guards.

Unit Compressor shall be hermetically sealed and mounted on rubber vibration isolators.

The heat pump coil shall be air cooled. Coil shall be constructed of aluminum fins mechanically bonded to copper tubes which are then cleaned, dehydrated and sealed.

Refrigeration circuit components shall include liquid line shut- off valve with sweat connections, suction shut-off valves with sweat connections, system charge of refrigerant R-410A and compressor oil.

Nominal unit electrical characteristics shall be as indicated on the drawings. Unit electrical power shall be single point connection. Control circuit will be 24v.

Unit accessories shall include Motor master head pressure control which shall permit unit to operate down to -20 degrees F and maintain normal system pressure operation. Low outdoor ambient temperatures, service sentry shall lock out compressor in case of safety switch trip and light a 24 volt signal light. Compressor shall have a 5 year warranty.

Unit shall be Trane, York, Carrier, or approved equal.

7. SECTION 15880 - AIR DISTRIBUTION

A. Furnish all labor and materials necessary to complete the sheet metal work associated with the heating, ventilating, air conditioning and exhaust systems, and other miscellaneous items shown and required.

B. All supply, return, make-up air, exhaust and Type 2 ductwork shall be constructed and installed in accordance with the sheet metal and air conditioning contractors national association (SMACNA) standards and ASHRAE standards.

C. Flexible ductwork shall be ATCO # 031 or approved equal. Flexible duct shall comply with NFPA bulletin 90A and shall be U.L. Listed as class 1 air duct and connector, standard 181. Ductwork shall be insulated with R-8.0 insulation.

D. Support horizontal ducts with hangers spaced not more than six (6) feet apart. Use straphangers for ducts up to thirty (30) inches wide, angle hangers or rods for ducts over thirty (30) inches wide. Straphangers to be one (1) inch wide, 20 gauge minimum; fasten to sides and bottom of duct with sheet metal screws.

E. Ducts shall be straight and smooth on the inside, with joints neatly finished. Ducts shall be suspended from the construction and shall be free from vibration. Curved elbows shall have a center radius equal to one and one-half (1-1/2) times the width of the duct. All square turns shall be vaned. Vanes consisting of curved metal blades shall permit the air to make abrupt turns without turbulence.

F. All joints in the heating, ventilating, and air conditioning and exhaust system ductwork shall be sealed. Sealant shall be as manufactured by Hard Cast Inc. or approved equal and shall consist of a mineral impregnated woven fiber tape and an actuator adhesive.

Sealant shall be SMACNA and U.L. approved, with a flame spread of 10 and a smoke developed of 0, non-toxic and non-flammable. Sealant shall be approved for operating temperatures from 0 degreesf.to 200 degrees f.

Sealant system shall be installed in strict accordance with the manufacturer's recommendations and when applied shall provide a permanent seal without any deterioration.

G. All supply and return air ductwork within fifteen (15) feet of each air handling unit shall be lined on the interior for sound attenuation. Lining shall have a one (1) inch thickness and shall be glued with one hundred (100) percent coverage and additionally secured with pins. Increase duct sizes indicated two (2) inches direction to accommodate the interior lining. Dimensions shown on drawings are clear inside dimensions. Liner shall be a non-fibrous elastomeric thermal (and acoustical) material, closed cell, moisture resistant with anti-microbial agent. Material shall meet ASTM E84 25/50 fire rating (NFPA 90A & 90B), ASTM G 21 & 22, VOC guidelines, ASTM C 518, etc.. Lining shall be Nomaco K-Flex Gray, Evonikfoams Solcoustic or approved equal.

H. Supply air diffusers shall have all steel construction with louvered face and finished with #26 off-white enamel. Titus model TMS, Metal-Aire, Krueger or approved equal.

I. Supply air diffusers shall have all steel construction with perforated face and finished with #26 off-white enamel. Titus model PSS, Metal-Aire, Krueger or approved equal.

J. Return air grilles shall have all steel construction with perforated face and finished with #26 off-white enamel. Titus model PAR, Metal-Aire, Krueger or approved equal.

K. Ceiling mounted fans shall be as manufactured by Cook. Fans shall have acoustically insulated housings and shall have a maximum sound level rating of 6.0 sones. Air deliveries shall be as indicated on the drawings and all fans shall bear the AMCA certified ratings seal and the U.L. label. Integral backdraft damper shall be totally chatter proof with no metal contact. Fan shall have true centrifugal wheels with inlet perpendicularto, or remote from, inlet grille. Grille shall be of aerodynamic design of white molded plastic eggcrate shape and provide eighty-five (85) percent free open area, terminal box shall be provided on the housing with cord, plug, and receptacle inside the housing. Entire fan, motor and wheel assembly shall be easily removable without disturbing the housing. Motor speeds shall not exceed 1600 rpm and all fan motors shall be suitably grounded and mounted on rubber-in-shear vibration isolators.

8. SECTION 15950 - CONTROLS

A. The controls contractor under this heading shall furnish and install all wiring necessary for a complete system of automatic temperature control, ventilation systems, exhaust systems, etc. as indicated on the drawings. The system shall include all necessary thermostats, relays, switches, transformers, contactors, etc. required for successful operation of all equipment as described in the sequence of operations. Electrical work in connection with all control systems shall be performed by the controls contractor and coordinated with the electrical contractor as needed to provide a full and complete package.

B. Each (rooftop, split-systems, heat pumps, hot/chilled water systems) shall be controlled by a wall mounted heating/ cooling thermostat with a (7) day/(24) hour program clock capable of (2) occupied/ non-occupied periods, with (2) heating/ (2) cooling set points, remote temperature sensor capability and auxiliary contact for economizer controls. Thermostat shall have a 5 degree dead band during occupied mode and set for 70°F heating and 75°F cooling. During unoccupied mode, unit shall maintain 55°F heating and 85°F cooling. Thermostat shall be compatible with the unit's economizer and/or accessory package as specified under section 15500. Coordinate control requirements with the proposed H.V.A.C. Equipment.

C. The automatic temperature control contractor shall be responsible for the commissioning of the project to assure a fully functional, fine-tuned H.V.A.C. system upon occupancy. The commissioning of the project shall be performed in accordance with american society of heating, refrigerating and air conditioning engineers, inc. (ASHRAE) pamphlet 1-1989 guideline for commissioning of H.V.A.C. systems. Commissioning is defined as verification of the proper operation of all equipment, alarms, safeties and control and energy management systems serving mechanical systems installed or modified on this project as defined within the specifications and indicated on the contract drawings.

Proper operation is defined as the activation of all controls, field or factory installed, to assure the correct sequencing of equipment and systems, including activation of all operating and safety controls, as hereinbefore described.

The automatic temperature control contractor shall report all system deficiencies to the mechanical contractor. The mechanical contractor shall instruct the proper trade to correct any deficiencies reported by the automatic temperature control contractor so that the project commissioning can be completed.

Prior to the commencement of any commissioning work, the automatic temperature control contractor shall provide the engineer with a commissioning report format for review and approval. The report format shall be delivered to the engineer not more than thirty (30) days after award of the A.T.C. contract or not less than sixty (60) days prior to start of A.T.C. work, whichever is earlier.

Commissioning report format shall include a list of all items to be verified, with the initials of the mechanic who verified the particular item/control and the date on which each item/control operation was verified.

Three (3) commissioning reports are required. The first report shall be completed during the initial commissioning of the project prior to occupancy. The second and third reports shall be completed no mor than two (2) months (1 report/month) after occupancy of the building. All controls/safeties shall be verified in the presence of the owner or the owner's representative. The final report shall also contain the signature of the owner or owner's representative for each item verified.

FARMERS & MERCHANTS BANK
25 WESTMINSTER PIKE
REISTERTOWN, MARYLAND, 21136
INTERIOR ALTERATION

I CERTIFY THAT THESE DOCUMENTS WERE PREPARED OR APPROVED BY ME AND THAT I AM A DULY LICENSED PROFESSIONAL ENGINEER UNDER THE LAWS OF THE STATE OF MARYLAND.

LICENSE NO.: 19994

EXP. DATE: 3/31/2027

THESE DRAWINGS ARE NOT PERMITTED TO BE COPIED OR REPRODUCED, EITHER WHOLLY OR PARTIALLY, UNLESS WRITTEN PERMISSION IS FIRST OBTAINED FROM SANDERS DESIGNS, P.A.

MECHANICAL & ELECTRICAL DESIGN CONSULTANTS, INC.
1901 N. Fountain Green Road
Bel Air, Maryland 21015-1411
410-893-2822 • Fax 410-803-0442
web site: www.jlrdesign.net

SANDERS | DESIGNS
ARCHITECTS PLANNERS
WWW.SANDERSDESIGNS.COM MAILBOX@SANDERSDESIGNS.COM
9727 GREENSIDE DRIVE, SUITE 202, COCKEYSVILLE, MARYLAND 21030 T: (410) 560 2624

No.	Date	Revision

Project No.:
Date:
Scale:
Edition: PERMIT SET
Drawing Name: MECHANICAL SPECIFICATIONS
Drawing Number: M-9

GENERAL PROJECT NOTES

1. UNLESS NOTED OTHERWISE, ALL WIRING & CONDUIT / CABLING SHOWN IS FOR DIAGRAMMATIC PURPOSES ONLY. COORDINATE INSTALLATION WITH ACTUAL FIELD CONDITIONS AND INSTALL PER SPECIFICATIONS. ALL WORK TO BE VERIFIED ON SITE. ANY CONFLICTS ARE TO BE REPORTED BACK TO THE ENGINEER FOR REVIEW PRIOR TO PROCEEDING.
2. WHERE APPLICABLE, ALL 2X2 LIGHT FIXTURES ARE TO BE INSTALLED IN THE SAME ORIENTATION SO SUSPENDED BASKETS, LENSES, VISIBLE LAMPS, ETC. ARE ALL FACING THE SAME DIRECTION.
3. REFER TO ARCHITECTURAL OR PHASING DRAWINGS FOR OVERALL PROJECT PHASING. PLAN AND COORDINATE THE WORK AS REQUIRED.
4. ANY EXISTING PANELBOARDS THAT WERE MODIFIED UNDER THIS CONTRACT ARE TO BE PROVIDED WITH NEW UPDATED DIRECTORIES.
5. ALL AREAS INDICATED WITH VACANCY SENSORS (VS) ARE TO BE WIRED FOR "MANUAL ON / AUTO OFF" (20 MINUTE MAX) OPERATION..
6. ALL PANELBOARD SCHEDULES ARE BASED ON THE USE OF COPPER CONDUCTORS. WHERE ALUMINUM CONDUCTORS ARE PERMITTED BY THE SPECIFICATIONS, ADJUST CONDUCTOR AND CONDUIT SIZES TO MAINTAIN SAME AMPACITY RATINGS.
7. ALL CONDUIT BOXES, CABLE TRAY, ETC. SHALL GENERALLY BE INSTALLED A MINIMUM OF 12" ABOVE CEILINGS. COORDINATE WITH OTHER TRADES PRIOR TO INSTALLATION.
8. ALL CEILING MOUNTED DEVICES SHALL BE CENTERED IN 2X2 CEILING TILES OR IN HALF OF 2X4 TILES, AS APPLICABLE.
9. ALL PROJECT CONDUIT AND CABLING SHALL BE INSTALLED ABOVE FINISHED CEILINGS WHERE POSSIBLE TO MINIMIZE VISIBILITY OF SUCH ITEMS. ALL CABLING INSTALLED IN EXPOSED STRUCTURE AREAS SHALL BE IN EMT CONDUIT INSTALLED TIGHT TO DECK ABOVE, EXCEPT FOR SHORT FINAL CONNECTIONS TO FIRE ALARM DEVICES, LIGHT FIXTURES, ETC. MC CABLE SHALL BE PERMITTED WHERE INSTALLED ABOVE FINISHED CEILINGS OR CONCEALED IN PARTITION WALLS.
10. ALL CABLING TO BE PROPERLY SECURED FROM THE STRUCTURE ABOVE. DO NOT SUPPORT CABLE/CONDUIT FROM OTHER OBJECTS IN THE CEILING SPACE, INCLUSIVE OF CEILING TILE HANGERS.
11. REFER TO ARCHITECTURAL DRAWINGS FOR CEILING TYPES, FINISHES, ETC. COORDINATE ALL LIGHT FIXTURE MOUNTING, FRAME KITS, ETC. AS REQUIRED.
12. TEMPORARILY REMOVE EXISTING LAY-IN TILES AND / OR CEILING GRID SYSTEMS, AS REQUIRED TO PERFORM THE WORK OF THIS CONTRACT. REINSTALL ALL COMPONENTS AT COMPLETION OF WORK AND REPLACE ANY DAMAGED COMPONENTS.
13. WHERE THE WORK OF THIS CONTRACT, INCLUDING THAT OF OTHER DISCIPLINES, REQUIRES THE REMOVAL AND REPLACEMENT OF THE CEILING, PROVIDE FOR REMOVAL AND REINSTALLATION OF ELECTRICAL DEVICES AND EQUIPMENT MOUNTED IN OR ON THE CEILING. ALTERNATIVELY, THE CONTRACTOR MAY PROVIDE TEMPORARY SUPPORT FOR SUCH DEVICES, INCLUDING REINSTALLATION INTO NEW CEILING.
14. ALL LOW VOLTAGE CABLING INSTALLED ABOVE CEILINGS AND NOT IN RACEWAY SHALL BE PLENUM RATED.
15. ALL BRANCH CIRCUITS SHALL UTILIZE INDIVIDUAL NEUTRAL CONDUCTORS. SHARED NEUTRALS AND MULTI-WIRE CIRCUITS ARE NOT PERMITTED UNLESS SPECIFICALLY PROVIDED WITH BREAKER/HANDLE TIES.
16. ALL BRANCH CIRCUITS AND FEEDERS SHALL INCLUDE AN EQUIPMENT GROUNDING CONDUCTOR. CONDUIT IS NOT PERMITTED AS THE SOLE GROUND PATH.
17. WHERE VOICE/DATA AND POWER OUTLETS APPEAR ON PLAN AS BACK TO BACK, OUTLETS SHALL BE STAGGERED TO REDUCE NOISE TRANSMISSION THROUGH WALL.
18. ALL EMERGENCY AND EGRESS LIGHTING FIXTURES SHALL BE CONNECTED TO THE LIFE SAFETY EMERGENCY BRANCH CIRCUITS AHEAD OF ANY SWITCHING, UNLESS INDICATED OTHERWISE.
19. PROVIDE ACCESS PANELS FOR ALL DUCT SMOKE DETECTORS, JUNCTION BOXES AND OTHER EQUIPMENT REQUIRING ACCESS OR ADJUSTMENT, AND LOCATED IN HARD CEILINGS OR BEHIND WALL PARTITIONS, IN CHASES, ETC.
20. UNLESS NOTED OTHERWISE, BRANCH CIRCUIT WIRING SHALL BE SIZED AS FOLLOWS TO COMPENSATE FOR VOLTAGE DROP. ADJUST CONDUIT SIZE AS NECESSARY:
    a. 120V, 0-90LF - #12AWG
    b. 120V, 91-140LF - #10AWG
    c. 120V, >140LF - #8AWG
21. FOR LIGHT FIXTURES, WIRING SHALL NOT PASS THROUGH ANY LUMINAIRE INTEGRAL JUNCTION BOX UNLESS LUMINAIRE IS IDENTIFIED FOR THROUGH-WIRING.
22. REFRIGERATOR RECEPTACLES SHALL BE MOUNTED AT 42" AFF AND 6" FROM ADJACENT COUNTER.
23. MULTIPLE SWITCHES IN THE SAME LOCATION SHALL USE A SINGLE MULTI-GANG DEVICE BOX AND COVERPLATE.
24. ANY EXISTING OUTLET COVERPLATES REMAINING AFTER DEMOLITION ARE TO BE REPLACED WITH NEW TO MATCH THE ADJACENT NEW WORK.
25. REFER TO ARCHITECTURAL REFLECTED CEILING PLANS FOR EXACT LOCATION OF LIGHTING FIXTURES AND GRID COORDINATION. VERIFY THAT ADEQUATE CLEARANCE FOR INSTALLATION, MAINTENANCE AND HEAT DISSIPATION IS AVAILABLE BEFORE ORDERING LIGHTING FIXTURES.
26. VERIFY ALL LOCATIONS, AMPERES AND VOLTAGES OF MECHANICAL EQUIPMENT WITH MECHANICAL CONTRACTOR PRIOR TO ROUGH-IN.
27. SEAL ALL CONDUIT PENETRATIONS THROUGH FIRE RATED WALLS AND CEILINGS TO MAINTAIN FIRE INTEGRITY. REFER TO ARCHITECTURAL DRAWINGS FOR FIRE RATED WALLS AND DRYWALL CEILINGS. SEAL ALL PENETRATIONS BY SURFACE MOUNTED AND RECESSED LIGHTING FIXTURES TO MAINTAIN FIRE RATING.
28. ALL BRANCH CIRCUITS SHALL BE RUN CONCEALED IN EXISTING AND NEW WALLS. CUT AND PATCH EXISTING WALLS AND SURFACES AS REQUIRED.
29. WHERE WALLS ARE INDICATED TO REMAIN BUT ARE TO BE PROVIDED WITH NEW FINISHES, PROVIDE FOR THE REMOVAL AND REINSTALLATION OF ALL EXISTING DEVICES THAT ARE NOTED TO REMAIN.
30. GROUNDED CONDUCTORS SHALL BE PIG-TAILED IN OUTLET BOXES OR MULTI-OUTLET ASSEMBLY FOR RECEPTACLES SO THE REMOVAL OF SUCH DEVICES DOES NOT INTERRUPT CONTINUITY.
31. ALL CORE DRILL LOCATIONS THROUGHOUT THE AREA OF WORK TO BE COORDINATED WITH THE TENANT/FURNITURE VENDOR.
32. LABEL EACH RECEPTACLE IN LEGIBLE PERMANENT MARKER ON THE BACK OF THE COVERPLATE AS TO WHERE THE RECEPTACLE IS SERVED FROM. IDENTIFY ANY DEDICATED CIRCUITS AS SUCH.
33. USE CONDULET SEALING FITTINGS WITH APPROVED SEALING COMPOUND ON ALL CONDUITS PASSING FROM INTERIOR TO EXTERIOR OF BUILDING.
34. SUPPORT RECESSED LIGHT FIXTURES FROM BUILDING STRUCTURE.
35. FOR INSULATED CEILINGS, PROVIDE NOTICE TO ARCHITECT FOR SUBSTITUTED LIGHT FIXTURES TO BE ISSUED BY ENGINEER PRIOR TO ORDERING ANY FIXTURES.

GENERAL DEMOLITION NOTES

1. EXISTING CONDITIONS INDICATED ON THIS DRAWING HAVE BEEN OBTAINED FROM EXISTING DRAWINGS OR GENERAL FIELD OBSERVATIONS AND MAY NOT INDICATE ACTUAL EXISTING CONDITIONS IN DETAIL OR DIMENSION. CONTRACTOR IS RESPONSIBLE FOR DETERMINING THE ACTUAL CONDITIONS AND EFFECT ON HIS WORK. SHOULD CONDITIONS BE DISCOVERED THAT PREVENT EXECUTION OF THE WORK AS INDICATED, IMMEDIATELY NOTIFY THE ARCHITECT IN WRITING FOR DIRECTION BEFORE PROCEEDING WITH THE WORK.
2. REMOVE ALL EQUIPMENT INDICATED, INCLUSIVE OF ASSOCIATED CONDUIT, WIRING, BOXES, SUPPORTS, ETC. BACK TO SOURCE OR LAST REMAINING DEVICE ON SAME CIRCUIT, UNLESS NOTED OTHERWISE.
3. EXISTING CIRCUITS INTERRUPTED BY DEMOLITION OR RELOCATED WORK, BUT SERVING ITEMS INDICATED TO REMAIN, SHALL BE MADE CONTINUOUS.
4. DEMOLITION SHALL INCLUDE REMOVAL OF ELECTRICAL EQUIPMENT AND ASSOCIATED COMPONENTS AND MATERIALS. DO NOT ABANDON IN PLACE ANY ITEMS UNLESS NOTED ON THE DRAWINGS. EQUIPMENT REMOVED SHALL BE OFFERED TO THE OWNER PRIOR TO DISPOSAL AND IF DESIRED, SHALL BE STORED ON SITE WHERE INSTRUCTED. ALL MATERIALS NOT RETAINED BY THE OWNER SHALL BE REMOVED FOR OFF-SITE DISPOSAL.
5. THE EXISTING FACILITY SHALL REMAIN IN OPERATION DURING CONSTRUCTION. ALL INTERRUPTIONS TO THE UTILITIES OR SERVICES MUST ME COORDINATED WITH THE OWNER TO MINIMIZE DISRUPTIONS. PROVIDE NOTICE TO THE OWNER 15 DAYS IN ADVANCE OF PLANNED OUTAGES.
6. WHENEVER THE BUILDING IS OCCUPIED DURING THE WORK, EXISTING FIRE ALARM AND LIFE SAFETY SYSTEMS SHALL BE KEPT IN OPERATION.
7. NOTIFY OWNER OF ANY DAMAGED OR NON-WORKING ITEMS PRIOR TO REMOVAL. ANY EQUIPMENT DAMAGED DURING REMOVAL AND/OR RELOCATION SHALL BE REPLACED AT THE CONTRACTORS EXPENSE WITH EQUIPMENT EQUAL TO EXISTING.
8. WHERE SITE DEMOLITION WORK REQUIRES REMOVAL OF LIGHT POLES, PAD MOUNTED EQUIPMENT, ETC, REMOVE ASSOCIATED POLE BASES, CONCRETE PADS, ETC. DOWN TO 36" BELOW FINAL GRADE.
9. ANY OPENINGS LEFT IN CEILINGS/WALLS/FLOORS SHALL BE PATCHED AND FINISHED TO MATCH EXISTING ADJACENT SURFACES. WHERE THE DEVICES ARE REMOVED FROM CEILING TILES, PROVIDE REPLACEMENT TILES TO MATCH EXISTING.
10. DISCONNECT AND REMOVE ALL ASSOCIATED ELECTRICAL CONNECTIONS FOR EXISTING HVAC AND PLUMBING EQUIPMENT BEING REMOVED, INCLUDING: CONDUIT, WIRING, OUTLETS, DISCONNECTING MEANS, STARTERS, SWITCHES, ETC. REFER TO MECHANICAL DRAWINGS FOR ADDITIONAL INFORMATION.
11. "REL" ADJACENT TO EQUIPMENT INDICATES EQUIPMENT IS TO BE RELOCATED.
12. EQUIPMENT SHOWN THIN/SOLID IS EXISTING TO REMAIN. EQUIPMENT SHOWN HEAVY/DASHED IS EXISTING TO BE REMOVED OR RELOCATED AS INDICATED.

NOTICE TO CONTRACTORS

PRIOR TO BID SUBMISSION PROCESS, ALL CONTRACTORS SHALL VISIT PROPOSED WORK SITE AND FIELD VERIFY ALL EXISTING CONDITIONS. ANY CONDITIONS THAT DIFFER FROM THAT SHOWN ON THESE PLANS SHALL BE REPORTED TO ARCHITECT/ENGINEER SO THAT NEW AND REVISED BID DRAWINGS OR INFORMATION MAY BE ISSUED. MODIFICATIONS TO SCOPE OF WORK WHICH RESULT FROM CONTRACTORS NEGLECT TO VISIT THE SITE PRIOR TO SUBMITTING BID, SHALL BE THE CONTRACTORS SOLE RESPONSIBILITY.

ELECTRICAL SYMBOLS

NOTE: ALL MOUNTING HEIGHTS ARE TO CENTER LINE OF THE OUTLET BOX UNLESS OTHERWISE INDICATED.

SYMBOL	DESCRIPTION
A	2X4, 2X2, 1X4 LIGHTING FIXTURE. LETTER ADJACENT TO FIXTURE INDICATES FIXTURE TYPE. REFER TO LIGHTING SCHEDULE
NL NL	INDICATES FIXTURE ON EMERGENCY OR NIGHT LIGHT CIRCUIT
B	LIGHTING FIXTURE - DOWNLIGHT, WALL BRACKET, WALLWASHER. LETTER ADJACENT TO FIXTURE INDICATES FIXTURE TYPE. REFER TO LIGHTING SCHEDULE
	EXIT LIGHT - CEILING, WALL, WITH DIRECTIONAL ARROWS
	COMBINATION EXIT LIGHT/BATTERY UNIT - WALL MOUNTED
	EMERGENCY BATTERY UNIT, REMOTE HEAD
$MC	SWITCH - LOW VOLTAGE MOMENTARY CONTACT TYPE
$VS	SWITCH - LINE VOLTAGE WALL VACANCY SENSOR TYPE
$VS D	SWITCH - LINE VOLTAGE WALL VACANCY SENSOR TYPE WITH DIMMER
$MC D	SWITCH - DIMMER WITH SINGLE MOMENTARY CONTACT SWITCH
$ $3 $4	SWITCH - SINGLE POLE, THREE WAY, FOUR WAY
$D $OS	SWITCH - DIMMER, OCCUPANCY SENSOR
$M	SWITCH - MOTOR RATED WITH THERMAL ELEMENT
VS	CEILING VACANCY LIGHTING CONTROL SENSOR
P TC	PHOTOCELL, TIMECLOCK
	RECEPTACLE - 20A, 125 VOLTS - DUPLEX, DOUBLE DUPLEX
	RECEPTACLE - 20A, 125 VOLTS - DUPLEX - COUNTER HEIGHT AT 44" AFF
	SPECIAL RECEPTACLE AS NOTED
D D	FLUSH FLOOR BOX - COMBINATION POWER AND TELEPHONE/DATA, POWER ONLY
	COMMUNICATION OUTLET - TELEPHONE/DATA - M.H. 1'-8"
	COMMUNICATION OUTLET - TELEPHONE/DATA - COUNTER HEIGHT AT 44"
	TELEPHONE TERMINAL BACKBOARD
	PANELBOARD - M.H. 6'-6" TO TOP - SURFACE MOUNT, FLUSH MOUNT
M	METER
J	JUNCTION BOX
	DISCONNECT SWITCH - UNFUSED, FUSED - M.H. 5'-6" TO TOP
	MOTOR - HORSEPOWER AS NOTED
	HEATING ELEMENT - CAPACITY AS NOTED
	GROUND CONNECTION
	BRANCH CIRCUIT - IN CEILING OR WALLS. 2 #12 & 1 #12 GROUND IN 1/2" CONDUIT UNLESS NOTED OTHERWISE
	BRANCH CIRCUIT - BELOW GRADE/SUBSLAB. 2 #12 & 1 #12 GROUND IN 1/2" CONDUIT UNLESS NOTED OTHERWISE
L-#	HOMERUN TO PANEL - LETTER INDICATES PANEL AND NUMBER INDICATES CIRCUIT NUMBER. NUMBER OF CROSSLINES INDICATES NUMBER OF CONDUCTORS WHEN MORE THAN 2. WITHOUT CROSSLINES - 2 #12 + #12 GROUND IN 1/2" CONDUIT
F	FIRE ALARM - PULL STATION M.H. 3'-10"
F 15	FIRE ALARM - AUDIBLE SIGNAL AND VISUAL FLASHER ON WALL WITH MINIMUM CANDELAS NOTED
F 15	FIRE ALARM - VISUAL FLASHER ON WALL WITH MINIMUM CANDELAS NOTED
# #	DRAWING NOTE, SPECIAL EQUIPMENT NUMBER
PP	POWER POLE

ABBREVIATIONS

A	- AMPS, AMPERE	MLO	- MAIN LUGS ONLY
AFF	- ABOVE FINISHED FLOOR	MCB	- MAIN CIRCUIT BREAKER
AFG	- ABOVE FINISHED GRADE	MH	- MOUNTING HEIGHT
cd	- CANDELA	MTD	- MOUNTED
CDT	- CONDUIT	NEC	- NATIONAL ELECTRIC CODE
CH	- COUNTER HEIGHT	NFSS	- NON FUSED SAFETY SWITCH
DC	- DIRECT CURRENT	NIC	- NOT IN CONTRACT
DN	- DOWN	NL	- NIGHT LIGHT
DWG	- DRAWING	PC	- PHOTOCELL
EF	- EXHAUST FAN	REL	- RELOCATE/RELOCATED
EX	- EXISTING	SE	- SERVICE ENTRANCE
FLA	- FULL LOAD AMPS	TC	- TIME CLOCK
FSS	- FUSED SAFETY SWITCH	U.O.N.	- UNLESS OTHERWISE NOTED
GND	- GROUND	V	- VOLTS
GFI	- GROUND FAULT INTERRUPTER	WP	- WEATHERPROOF
HP	- HORSEPOWER		

FARMERS & MERCHANTS BANK
25 WESTMINSTER PIKE
REISTERTOWN, MARYLAND, 21136
INTERIOR ALTERATION

I CERTIFY THAT THESE DOCUMENTS WERE PREPARED OR APPROVED BY ME AND THAT I AM A DULY LICENSED PROFESSIONAL ENGINEER UNDER THE LAWS OF THE STATE OF MARYLAND.

LICENSE NO.: 19994

EXP. DATE: 3/31/2027

THESE DRAWINGS ARE NOT PERMITTED TO BE COPIED OR REPRODUCED, EITHER WHOLLY OR PARTIALLY, UNLESS WRITTEN PERMISSION IS FIRST OBTAINED FROM SANDERS DESIGNS, P.A.

MECHANICAL & ELECTRICAL DESIGN CONSULTANTS, INC.
1901 N. Fountain Green Road
Bel Air, Maryland 21015-1411
410-893-2822 • Fax 410-803-0442
web site: www.jlrdesign.net

SANDERS | DESIGNS
ARCHITECTS PLANNERS
WWW.SANDERSDESIGNS.COM
MAILBOX@SANDERSDESIGNS.COM
9727 GREENSIDE DRIVE, SUITE 202, COCKEYSVILLE, MARYLAND 21030 T: (410) 560 2624

No.	Date	Revision

Project No.:
Date:
Scale:
Edition: PERMIT SET
Drawing Name: **NOTES & SYMBOLS**
Drawing Number: E-1

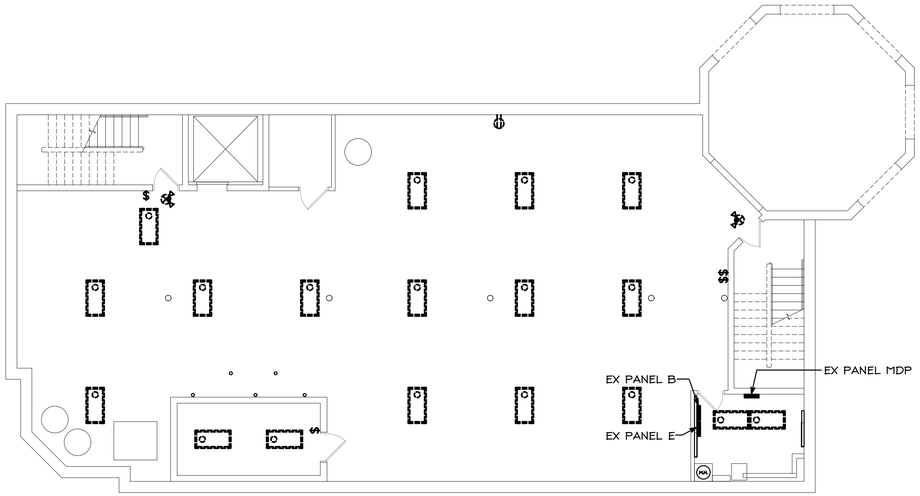

DEMO - BASEMENT - LIGHTING

SCALE: 1/8"=1'-0"

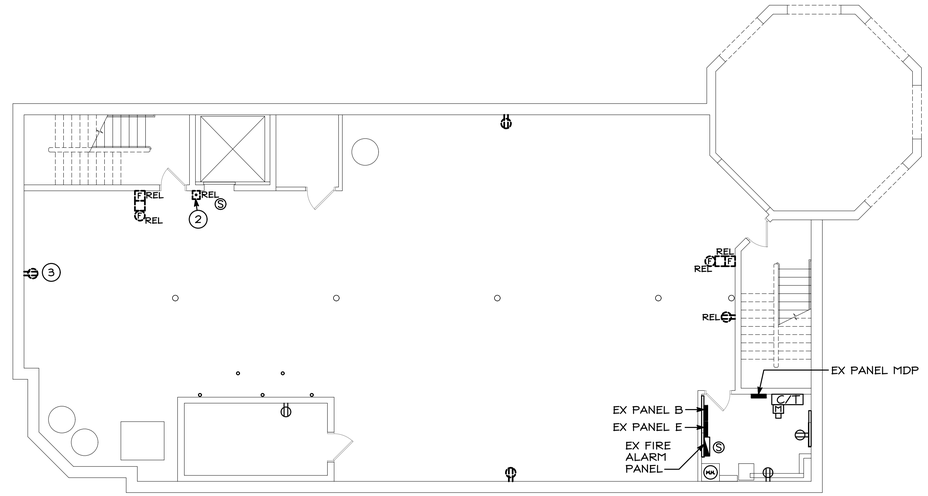

DEMO - BASEMENT - POWER

SCALE: 1/8"=1'-0"

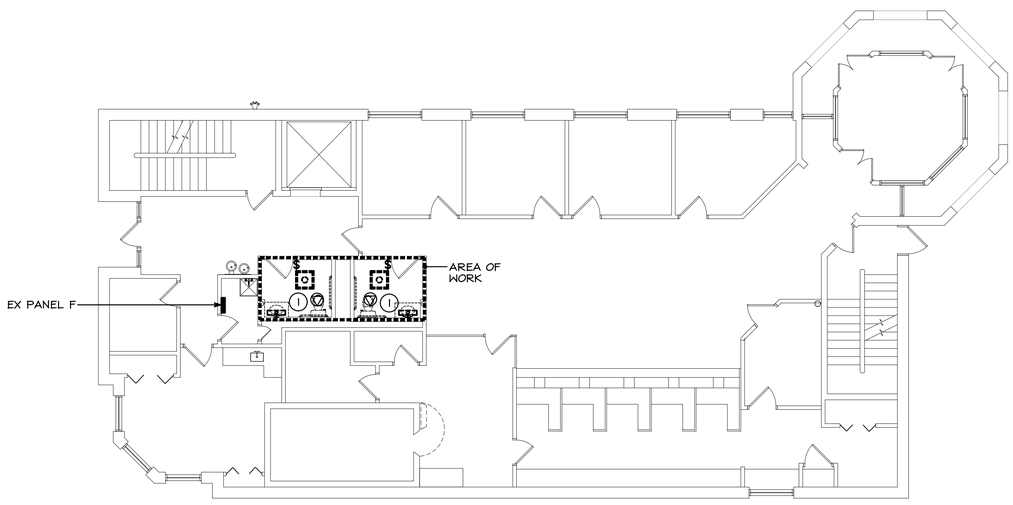

DEMO - FIRST FLOOR - LIGHTING

SCALE: 1/8"=1'-0"

GENERAL NOTES

1. WHERE LIGHTING FIXTURES ARE SHOWN TO BE REMOVED, EXISTING CIRCUITING IS TO REMAIN. REFER TO NEW WORK PLAN, E-4.
2. EQUIPMENT SHOWN THIN/SOLID IS EXISTING. EQUIPMENT SHOWN HEAVY/DASHED IS DEMO.

DRAWING NOTES

1. DISCONNECT EXISTING EXHAUST FAN TO REMAIN FROM LIGHTING CIRCUIT.
2. EXISTING ELEVATOR CONTROLS TO BE DISCONNECTED AND RELOCATED PER FURRING OUT OF WALL.
3. REMOVE EXISTING RECEPTACLE. RETAIN CIRCUIT FOR NEW QUAD RECEPTACLE.

0 4 8 16 24

SCALE:1/8"=1'-0"

FARMERS & MERCHANTS BANK
25 WESTMINSTER PIKE
REISTERTOWN, MARYLAND, 21136
INTERIOR ALTERATION

9.30.26

I CERTIFY THAT THESE DOCUMENTS WERE PREPARED OR APPROVED BY ME AND THAT I AM A DULY LICENSED PROFESSIONAL ENGINEER UNDER THE LAWS OF THE STATE OF MARYLAND.

LICENSE NO.: 19994

EXP. DATE: 3/31/2027

THESE DRAWINGS ARE NOT PERMITTED TO BE COPIED OR REPRODUCED, EITHER WHOLLY OR PARTIALLY, UNLESS WRITTEN PERMISSION IS FIRST OBTAINED FROM SANDERS DESIGNS, P.A.

MECHANICAL & ELECTRICAL DESIGN CONSULTANTS, INC.
1901 N. Fountain Green Road
Bel Air, Maryland 21015-1411
410-893-2822 • Fax 410-803-0442
web site: www.jlrdesign.net

SANDERS | DESIGNS
ARCHITECTS PLANNERS
WWW.SANDERSDESIGNS.COM
MAILBOX@SANDERSDESIGNS.COM
9727 GREENSIDE DRIVE, SUITE 202, COCKEYSVILLE, MARYLAND 21030 T: (410) 560 2624

No.	Date	Revision

Project No.:
Date:
Scale:
Edition:
PERMIT SET

Drawing Name:
DEMO BASEMENT & FIRST FLOOR - LIGHTING & POWER PLANS

Drawing Number:
E-2

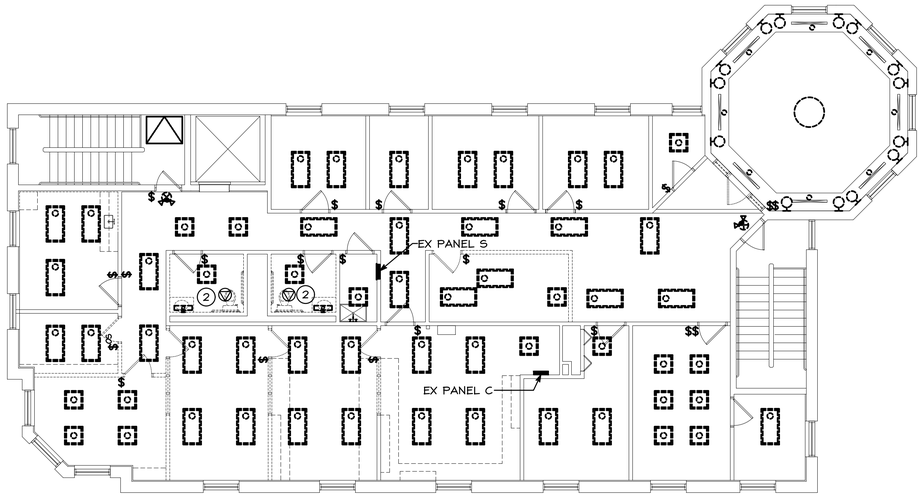

DEMO - SECOND FLOOR - LIGHITNG

SCALE: 1/8"=1'-0"

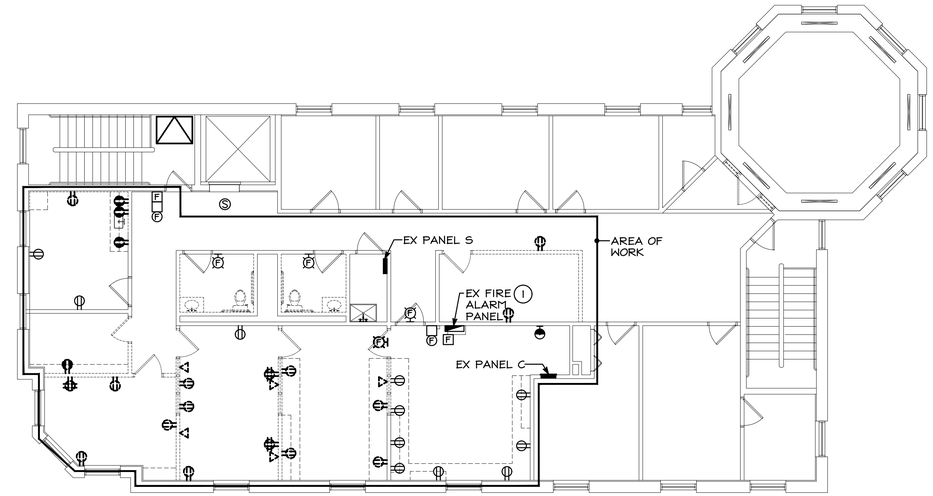

DEMO - SECOND FLOOR - POWER

SCALE: 1/8"=1'-0"

GENERAL NOTES

1. WHERE LIGHTING FIXTURES ARE SHOWN TO BE REMOVED, EXISTING CIRCUITING IS TO REMAIN. REFER TO NEW WORK PLAN, E-4.
2. EQUIPMENT SHOWN THIN/SOLID IS EXISTING. EQUIPMENT SHOWN HEAVY/DASHED IS DEMO.

DRAWING NOTES

1. EXISTING FIRE SUPPRESSION SYSTEM AND ALL ASSOCIATED DEVICES (UNLESS NOTED OTHERWISE) TO REMAIN.
2. DISCONNECT EXISTING EXHAUST FAN TO REMAIN FROM LIGHTING CIRUIT.

0 4 8 16 24

SCALE:1/8"=1'-0"

FARMERS & MERCHANTS BANK
25 WESTMINSTER PIKE
REISTERTOWN, MARYLAND, 21136
INTERIOR ALTERATION

I CERTIFY THAT THESE DOCUMENTS WERE PREPARED OR APPROVED BY ME AND THAT I AM A DULY LICENSED PROFESSIONAL ENGINEER UNDER THE LAWS OF THE STATE OF MARYLAND.

LICENSE NO.: 19994

EXP. DATE: 3/31/2027

THESE DRAWINGS ARE NOT PERMITTED TO BE COPIED OR REPRODUCED, EITHER WHOLLY OR PARTIALLY, UNLESS WRITTEN PERMISSION IS FIRST OBTAINED FROM SANDERS DESIGNS, P.A.

MECHANICAL & ELECTRICAL DESIGN CONSULTANTS, INC.
1901 N. Fountain Green Road
Bel Air, Maryland 21015-1411
410-893-2822 • Fax 410-803-0442
web site: www.jlrdesign.net

SANDERS | DESIGNS
ARCHITECTS PLANNERS
WWW.SANDERSDESIGNS.COM
MAILBOX@SANDERSDESIGNS.COM
9727 GREENSIDE DRIVE, SUITE 202, COCKEYSVILLE, MARYLAND 21030 T: (410) 560 2624

No.	Date	Revision

Project No.:

Date:

Scale:

Edition:

PERMIT SET

Drawing Name:

DEMO SECOND FLOOR - LIGHTING & POWER PLANS

Drawing Number:

E-3

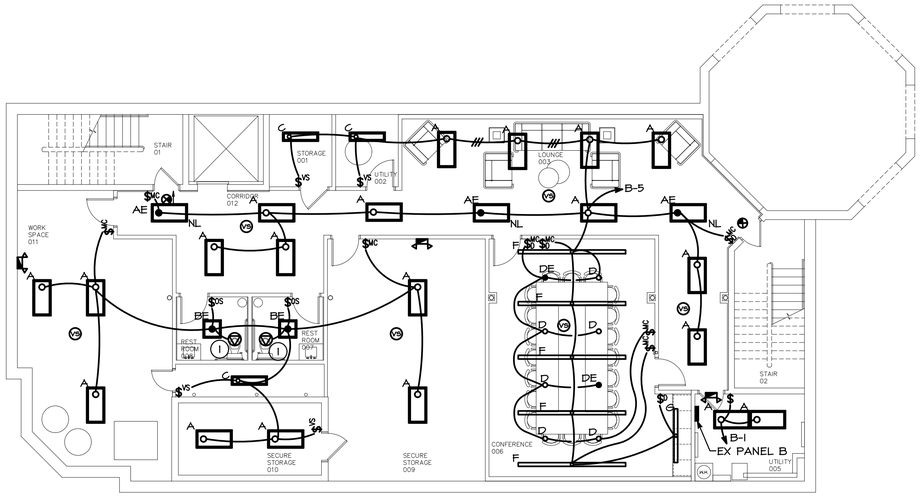

NEW WORK - BASEMENT FLOOR - LIGHTING

SCALE: 1/8"=1'-0"

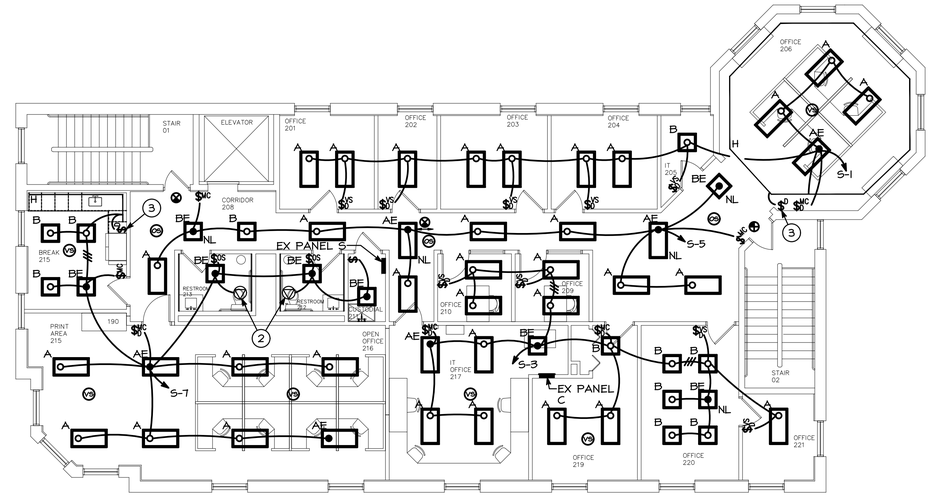

NEW WORK - SECOND FLOOR - LIGHTING

SCALE: 1/8"=1'-0"

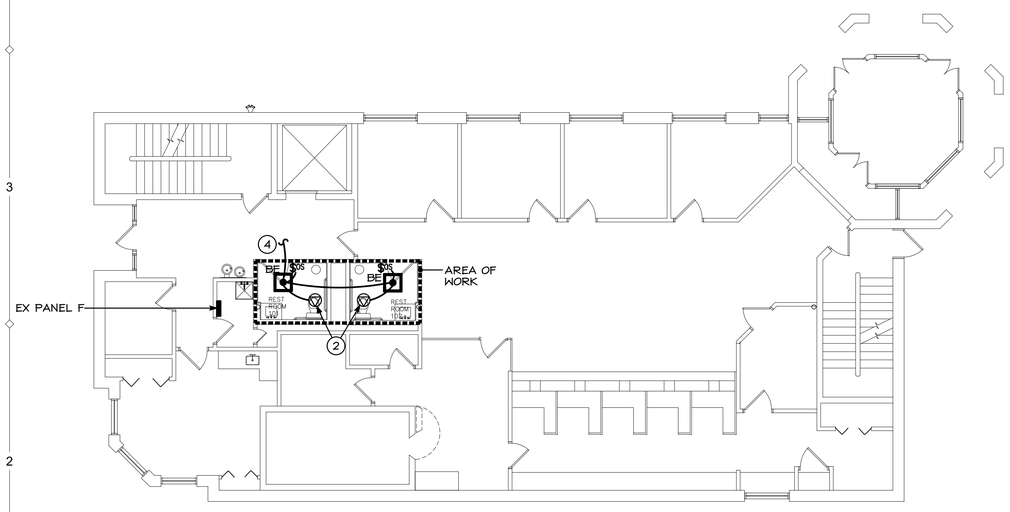

NEW WORK - FIRST FLOOR - LIGHTING

SCALE: 1/8"=1'-0"

LIGHT FIXTURE SCHEDULE

TYPE	LAMPS/ WATTS	MOUNTING	VOLTS	DESCRIPTION	CATALOG NO.
A	LED 38W	RECESSED	120	2'x4' LED TROFFER WITH CURVED ACRYLIC DIFFUSER AND DIMMING DRIVER, 5,100 LUMENS	HE WILLIAMS DIL-G-S-24-L51-835-AD -DIM-120
AE	LED 38W	RECESSED	120	SAME AS "A" BUT WITH EMERGENCY BATTERY	
B	LED 31W	RECESSED	120	2'x2' LED TROFFER WITH CURVED ACRYLIC DIFFUSER AND DIMMING DRIVER, 4,500 LUMENS	HE WILLIAMS DIL-G-S-22-L45-835-A D-DIM-120
BE	LED 31W	RECESSED	120	SAME AS "B" BUT WITH EMERGENCY BATTERY	
C	LED 42W	SUSPENDED	120	4' STRIP, 4,800 LUMENS, DIMMING DRIVER	HE WILLIAMS F54-LS-8CS
D	LED 16W	RECESSED	120	6" DOWNLIGHT, DIMMING DRIVER, 2,000 LUMENS	HE WILLIAMS 6DR-TL-L20-835-DIM-UNV-OW-OF-CS
DE	LED 16W	RECESSED		SAME AS "D" BUT WITH EMERGENCY BATTERY	
F	LED 48W	PENDANT	120	12', LINEAR, DIMMING DRIVER, 800 LUMENS	HE WILLIAMS LRX2-D-12'-L4-835-DMA -AC-**-DIM-120
G	LED 24W	PENDANT	120	6', LINEAR, DIMMING DRIVER, 800 LUMENS	HE WILLIAMS LRX2-D-6'-L4-835-DMA -AC-**-DIM-120
H	LED 100W	TAPE	120	TAPE LIGHT	ALLOY LED
⊗	LED	UNIVERSAL	120	LED EXIT SIGN WITH RED LETTER & EMERGENCY NICKEL CADMIUM BATTERY *	LIGHT ALARMS SEN F TA GC SERIES
	LED	SURFACE WALL	120	EMERGENCY BATTERY PACK WITH WHITE CONTEMPORARY HOUSING **	LIGHT ALARMS LCA-2LEDR SERIES

* COORDINATE EXACT COLOR WITH AHJ.
** EMERGENCY OPERATION ONLY.

GENERAL NOTES

1. CONNECT EXIT SIGNS, EMERGENCY BATTERY UNITS AND NIGHT LIGHTS (NL) TO THE UNSWITCHED PORTION OF THE LIGHTING CIRCUIT SERVING THAT RESPECTIVE AREA.
2. COORDINATE FINAL LOCATION OF ALL LIGHTS AND SWITCHES WITH THE TENANT PRIOR TO ROUGH-IN.
3. REFER TO ARCHITECTURAL REFLECTED CEILING PLAN FOR GRID COORDINATION AND EXACT LOCATION OF LIGHT FIXTURES.
4. ALL AREAS INDICATED WITH VACANCY SENSORS (VS) ARE TO BE WIRED FOR "MANUAL ON / AUTO OFF" (20 MINUTE MAX) OPERATION.

DRAWING NOTES

1. EXHAUST FAN: 120V, 40.5W. CONNECT TO LIGHTING CIRCUIT.
2. CONNECT EXISTING EXHAUST FAN TO LIGHTING CIRCUIT.
3. 100W CONSTANT VOLTAE LLED DRIVER WITH INTEGRATED DIMMER FOR SINGLE GAN BOX. xDRIVE #AL-97-02-24100
4. CONNECT TO EXISTING LIGHTING CIRCUIT SERVING THIS AREA.

0 4 8 16 24
SCALE:1/8"=1'-0"

FARMERS & MERCHANTS BANK
25 WESTMINSTER PIKE
REISTERTOWN, MARYLAND, 21136
INTERIOR ALTERATION

I CERTIFY THAT THESE DOCUMENTS WERE PREPARED OR APPROVED BY ME AND THAT I AM A DULY LICENSED PROFESSIONAL ENGINEER UNDER THE LAWS OF THE STATE OF MARYLAND.

LICENSE NO.: 19994

EXP. DATE: 3/31/2027

THESE DRAWINGS ARE NOT PERMITTED TO BE COPIED OR REPRODUCED, EITHER WHOLLY OR PARTIALLY, UNLESS WRITTEN PERMISSION IS FIRST OBTAINED FROM SANDERS DESIGNS, P.A.

MECHANICAL & ELECTRICAL DESIGN CONSULTANTS, INC.
1901 N. Fountain Green Road
Bel Air, Maryland 21015-1411
410-893-2822 • Fax 410-803-0442
web site: www.jlrdesign.net

SANDERS | DESIGNS
ARCHITECTS PLANNERS
MAILBOX@SANDERSDESIGNS.COM
WWW.SANDERSDESIGNS.COM
9727 GREENSIDE DRIVE, SUITE 202, COCKEYSVILLE, MARYLAND 21030 T: (410) 560 2624

No.	Date	Revision

Project No.:
Date:
Scale:
Edition:
PERMIT SET
Drawing Name:
BASEMENT, FIRST, SECOND FLOOR - LIGHTING PLANS
Drawing Number:
E-4

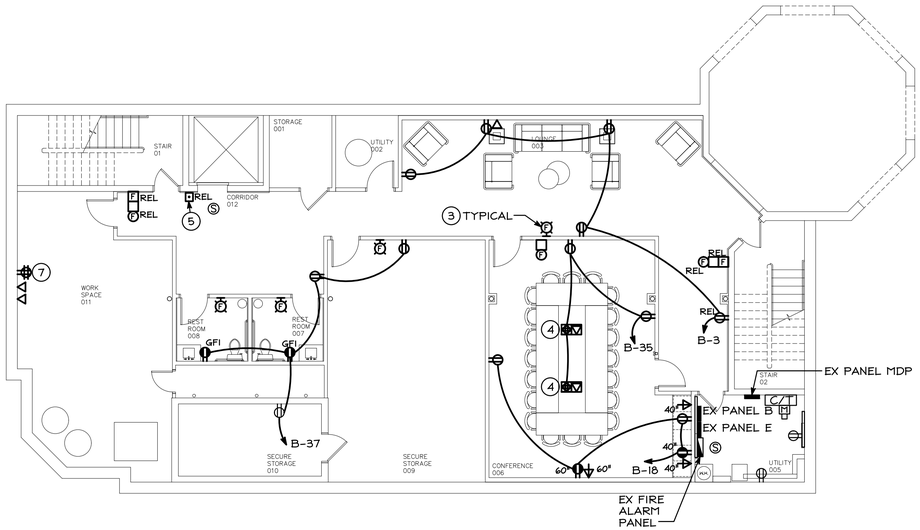

NEW WORK - BASEMENT FLOOR - POWER

SCALE: 1/8"=1'-0"

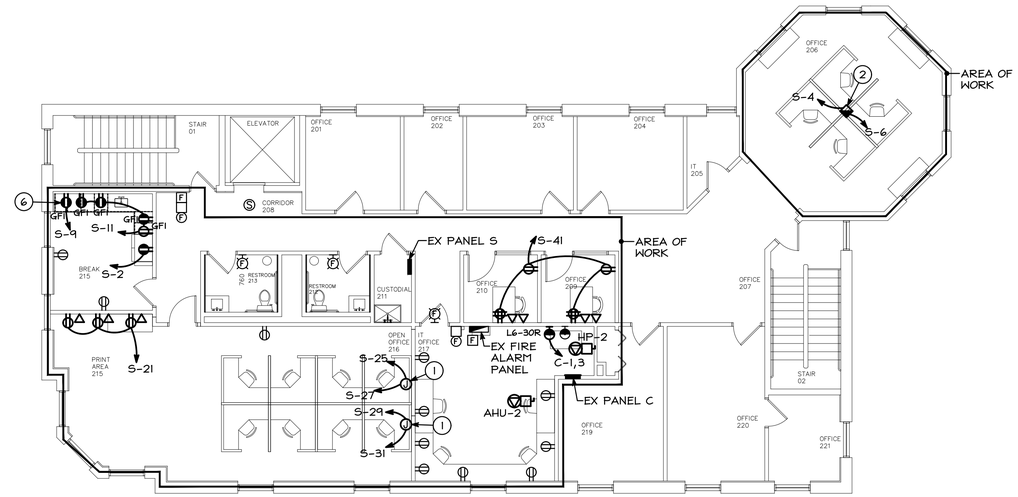

NEW WORK - SECOND FLOOR - POWER

SCALE: 1/8"=1'-0"

GENERAL NOTES

1. RECEPTACLES INSTALLED IN ENCLOSED OFFICES, CONFERENCE ROOMS, COPY ROOMS, BREAK ROOMS, AND WORKSTATIONS, SHALL BE CONTROLLED SPLIT TYPE RECEPTACLE. RECEPTACLE TO BE CONTROLLED VIA WALL/CEILING VACANCY SENSOR. PROVIDE ADDITIONAL RELAYS AS REQUIRED.
2. 25% OF BRANCH CIRCUIT FEEDERS FOR MODULAR FURNITURE SHALL BE CONTROLLED VIA CONTACTOR/TIME CLOCK.
3. COORDINATE EXACT LOCATION/MOUNTING HEIGHT OF RECEPTACLES/DATA BOXES WITH OWNER PRIOR TO ROUGH-IN.
4. CONNECT MOTOR OPERATED DAMPERS (MOD'S) LOCATED IN BASEMENT TO B-42. REFER TO MECHANICAL PLANS FOR EXACT LOCATIONS/QUANTITIES.

FIRE ALARM SYSTEM LAYOUT AND ZONING IS SCHEMATIC FOR BIDDING PURPOSES ONLY. ELECTRICAL CONTRACTORS FIRE ALARM VENDOR SHALL PREPARE COMPLETE SYSTEM SHOP DRAWINGS AND SUBMIT TO FIRE MARSHALL FOR APPROVAL

DRAWING NOTES

1. TWO JUNCTION BOXES FOR MODULAR FURNITURE FEED. (1 POWER & 1 TELECOMMUNICATION). CONNECT POWER TO FURNITURE BY MANUFACTURER'S CABLE WHIP. PROVIDE 1" EMT TO CEILING FROM TELECOMMUNICATION BOX AND 1" FLEXIBLE CONDUIT TO FURNITURE FOR TELECOMMUNICATION CABLES. PROVIDE TWO 20A CIRCUITS, (1) CONTROLLED, (1) NON CONTROLLED.
2. TWO CEILING MOUNTED JUNCTION BOXS FOR SERVICE TO POWER POLE TO SERVE WORKSTATIONS. (POWER & 1 TELECOMMUNICATION) PROVIDE TWO 20 AMP CIRCUITS, (1) CONTROLLED, (1) NOT CONTROLLED.
3. PROVIDE NEW FIRE ALARM DEVICES THAT MATCH EXISTING DEVICES AND ARE COMPATIBLE WITH THE EXISTING FIRE ALARM SYSTEM. EXTEND AND CONNECT TO EXISTING FIRE ALARM PANEL PER MANUFACTURERS RECOMMENDATIONS. MAKE ALL MODIFICATIONS AND ADDITIONS AS NECESSARY TO THE EXISTING FIRE ALARM SYSTEM THAT PROVIDE A WORKING SYSTEM THAT MEETS ALL NFPA REQUIREMENTS.
4. FLOOR BOX WITH (1) QUAD AND (1) DATA BOX. TRENCH FLOOR AND PROVIDE (1) ¾" CONDUIT FOR POWER AND (1) 1" CONDUIT FOR DATA UP TO AND ABOVE ACCESSIBLE CEILING. COORDINATE EXACT REQUIREMENTS WITH OWNER PRIOR TO ROUGH IN.
5. RELOCATED ELEVATOR CONTROLS, EXTEND AND RECONNECT TO CIRCUIT PREVIOUSLY SERVING.
6. MOUNTED ABOVE COUNTER FOR MICROWAVE. COORDINATE EXACT LOCATION/HEIGHT IN FIELD.
7. CONNECT TO EXISTING RECEPTACLE CIRCUIT PREVIOUSLY SERVING.

MECHANICAL UNIT SCHEDULE

UNIT NUMBER	UNIT MCA	UNIT MOCP	UNIT VOLTS/Φ	CIRCUIT NUMBER	NOTES
AHU-2	5	15	208V/1Φ	C-2,4	1, 2
HP-2	15	20	208V/1Φ	C-47,49	1, 2

NOTE:
1. SEE PANEL SCHEDULE FOR CONDUCTOR SIZES
2. AHU-2/HP-2 IS A BACKUP SYSTEM THAT WILL ONLY RUN IF EX AHU-1/ EX HP-1 GOES DOWN. REFER TO MECHANICAL PLANS FOR ADDITIONAL INFORMATION.

0 4 8 16 24

SCALE:1/8"=1'-0"

FARMERS & MERCHANTS BANK
25 WESTMINSTER PIKE
REISTERTOWN, MARYLAND, 21136
INTERIOR ALTERATION

I CERTIFY THAT THESE DOCUMENTS WERE PREPARED OR APPROVED BY ME AND THAT I AM A DULY LICENSED PROFESSIONAL ENGINEER UNDER THE LAWS OF THE STATE OF MARYLAND.

LICENSE NO.: 19994

EXP. DATE: 3/31/2027

THESE DRAWINGS ARE NOT PERMITTED TO BE COPIED OR REPRODUCED, EITHER WHOLLY OR PARTIALLY, UNLESS WRITTEN PERMISSION IS FIRST OBTAINED FROM SANDERS DESIGNS, P.A.

MECHANICAL & ELECTRICAL DESIGN CONSULTANTS, INC.
1901 N. Fountain Green Road
Bel Air, Maryland 21015-1411
410-893-2822 • Fax 410-803-0442
web site: www.jlrdesign.net

SANDERS | DESIGNS
ARCHITECTS PLANNERS
WWW.SANDERSDESIGNS.COM
MAILBOX@SANDERSDESIGNS.COM
9727 GREENSIDE DRIVE, SUITE 202, COCKEYSVILLE, MARYLAND 21030 T: (410) 560 2624

No.	Date	Revision

Project No.:
Date:
Scale:
Edition:
PERMIT SET
Drawing Name:
BASEMENT & SECOND FLOOR POWER PLANS
Drawing Number:
E-5

CKT QTY		DEMAND	NON/ CONT	PNL KVA	SUBPNL KVA	DEMAND KVA	TOTAL KVA
1	Lighting [L]	1	C	4.0	15.8	19.8	24.8
	Receptacles [R] *	0.5	N		77.1	43.6	43.6
	Motors [M]	1	<M/H>				
	Motors (alternate) [M2]	1	<M/H>				
	Multimotor/Combination [MM]	1	<M/H>				
	Heating [H] **	1	<M/H>		13.5	**	**
	Air Conditioning [A] **	1	<M/H>		47.1	47.1	47.1
3	Other (appliances, etc.) [O]	1	N	18.2	2.6	20.8	20.8
	Auxiliary [X]	1	C		4.5	4.5	5.6
____	Kitchen [K]	0.65	N				

PANEL CONNECTED LOAD	182.8 KVA	@ 400 AMPS
PANEL DEMAND LOAD	135.8 KVA	144.1 CB MAX KVA
TOTAL PANEL LOAD	141.8 KVA 393.6 AMPS	
SPARE CAPACITY =	2.3 KVA	
(BASED ON CB)	6.4 AMPS 1.6 %	

FOR CONT. LOADS (C), TOTAL KVA=DEMAND KVA*1.25; FOR NONCONT. (N) & MOTOR/HEATING <M/H> LOADS, TOTAL KVA=DEMAND KVA
* IF RECEPTACLE LOAD IS >10KVA, RECEPTACLE DEMAND LOAD IS (CONNECTED LOAD - 10KVA) * .5 + 10KVA
** INDICATES GREATER OF HEATING OR COOLING. GREATEST SEASONAL LOAD SAME

EXISTING
SURFACE MOUNTED PANEL MDP 120/208 VOLT 3 PHASE 4 WIRE 800 AMP BUS 400 AMP MAIN BREAKER EXISTING A.I.C.

TYPE	KVA	HP	CKT NO.	FOR	BRANCH BREAKERS FRAME	P	TRIP	# SETS	WIRING #	SIZE	GND	COND.	CKT NO.	FOR	BRANCH BREAKERS FRAME	P	TRIP	# SETS	WIRING #	SIZE	GND	COND.	TYPE	KVA	HP
			1	EX PANEL C	100	3	100	EX	EX	EX	EX	EX	2	EX PANEL S	100	3	100	EX	EX	EX	EX	EX			
			3	----------	----	----	----	----	--	----	----	----	4	----------	----	----	----	----	--	----	----	----			
			5	----------	----	----	----	----	--	----	----	----	6	----------	----	----	----	----	--	----	----	----			
			7	EX PANEL F	225	3	125	EX	EX	EX	EX	EX	8	EX PANEL B	225	3	125	EX	EX	EX	EX	EX			
			9	----------	----	----	----	----	--	----	----	----	10	----------	----	----	----	----	--	----	----	----			
			11	----------	----	----	----	----	--	----	----	----	12	----------	----	----	----	----	--	----	----	----			
			13	EX 2ND FLOOR PANEL "R"	225	3	200	EX	EX	EX	EX	EX	14	EX ELEVTOR CB	225	3	200	EX	EX	EX	EX	EX	O	18.0	
			15	----------	----	----	----	----	--	----	----	----	16	----------	----	----	----	----	--	----	----	----			
			17	----------	----	----	----	----	--	----	----	----	18	----------	----	----	----	----	--	----	----	----			
L	4.0		19	EX PANEL E	100	3	60	EX	EX	EX	EX	EX	20	SPACE	100	1	----	----	--	----	----	----			
			21	----------	----	----	----	----	--	----	----	----	22	EX FIRE ALARM	100	1	20	EX	EX	EX	EX	EX	O	0.1	
			23	----------	----	----	----	----	--	----	----	----	24	EX CKT	100	1	20	EX	EX	EX	EX	EX	O	0.1	

CKT QTY		DEMAND	NON/ CONT	PNL KVA	SUBPNL KVA	DEMAND KVA	TOTAL KVA
13	Lighting [L]	1	C	5.9		5.9	7.4
9	Receptacles [R] *	0.5	N	6.4		6.4	6.4
	Motors [M]	1	<M/H>				
	Motors (alternate) [M2]	1	<M/H>				
	Multimotor/Combination [MM]	1	<M/H>				
6	Heating [H] **	1	<M/H>	13.5		13.5	13.5
	Air Conditioning [A] **	1	<M/H>			**	**
5	Other (appliances, etc.) [O]	1	N	2.1		2.1	2.1
1	Auxiliary [X]	1	C	4.5		4.5	5.6
____	Kitchen [K]	0.65	N				

PANEL CONNECTED LOAD	32.4 KVA	@ 125 AMPS
PANEL DEMAND LOAD	32.4 KVA	45.0 CB MAX KVA
TOTAL PANEL LOAD	35.0 KVA 97.2 AMPS	
SPARE CAPACITY =	10.0 KVA	
(BASED ON CB)	27.8 AMPS 22.3 %	

FOR CONT. LOADS (C), TOTAL KVA=DEMAND KVA*1.25; FOR NONCONT. (N) & MOTOR/HEATING <M/H> LOADS, TOTAL KVA=DEMAND KVA
* IF RECEPTACLE LOAD IS >10KVA, RECEPTACLE DEMAND LOAD IS (CONNECTED LOAD - 10KVA) * .5 + 10KVA
** INDICATES GREATER OF HEATING OR COOLING. GREATEST SEASONAL LOAD SAME

EXISTING
SURFACE MOUNTED PANEL B 120/208 VOLT 3 PHASE 4 WIRE 200 AMP BUS MAIN LUGS ONLY 10,000 A.I.C.

TYPE	KVA	HP	CKT NO.	FOR	BRANCH BREAKERS FRAME	P	TRIP	# SETS	WIRING #	SIZE	GND	COND.	CKT NO.	FOR	BRANCH BREAKERS FRAME	P	TRIP	# SETS	WIRING #	SIZE	GND	COND.	TYPE	KVA	HP
L	0.1		1	**ELEC RM LIGHTS**	100	1	20	**1**	**2**	**12**	**12**	**3/4"**	2	EX ELEVATOR MACHINE RM	100	1	20	EX	EX	EX	EX	EX	L	0.3	
R	1.0		3	**BASEMENT RECEPTS**	100	1	20	**1**	**2**	**12**	**12**	**3/4"**	4	EX ELEVATOR PIT	100	1	20	EX	EX	EX	EX	EX	L	0.2	
L	1.6		5	**BASEMENT LIGHTS**	100	1	20	**1**	**2**	**12**	**12**	**3/4"**	6	EX ELEVATOR LTG	100	1	20	EX	EX	EX	EX	EX	L	0.2	
R	0.2		7	EX PANEL WALL RECEPT	100	1	20	EX	EX	EX	EX	EX	8	EX RECEPT SOUTH WALL	100	1	20	EX	EX	EX	EX	EX	R	0.8	
O	0.5		9	EX SUMP	100	1	20	EX	EX	EX	EX	EX	10	EX REAR REAR WALL	100	1	20	EX	EX	EX	EX	EX	R	0.8	
R	0.4		11	EX TELE RECEPT	100	1	20	EX	EX	EX	EX	EX	12	EX LTG/RECEPT VAULT	100	1	20	EX	EX	EX	EX	EX	L	0.5	
L	0.3		13	EX STAIRWELL LTG FRONT	100	1	20	EX	EX	EX	EX	EX	14	EX SUMP PUMP	100	1	20	EX	EX	EX	EX	EX	O	0.5	
L	0.1		15	EX TIME CLOCK/PHOTO CELL	100	1	20	EX	EX	EX	EX	EX	16	EX SUMP PUMP	100	1	20	EX	EX	EX	EX	EX	O	0.5	
L	0.3		17	EX CANOPY LTG	100	1	20	EX	EX	EX	EX	EX	18	**BASEMENT RECEPTS**	100	1	20	**1**	**2**	**12**	**12**	**3/4"**	R	0.8	
L	0.3		19	EX DRIVE THRU	100	1	20	EX	EX	EX	EX	EX	20	EX WINDOW HTR	100	2	20	EX	EX	EX	EX	EX	H	1.5	
H	0.5		21	EX GEN JACKET HEATER	100	1	20	EX	EX	EX	EX	EX	22	----------	----	----	----	----	--	----	----	----			
H	7.0		23	EX BASEMENT HTR	100	2	60	EX	EX	EX	EX	EX	24	EX WINDOW HTR	100	2	20	EX	EX	EX	EX	EX	H	1.5	
			25	----------	----	----	----	----	--	----	----	----	26	----------	----	----	----	----	--	----	----	----			
			27	SPARE	100	2	20	----	--	----	----	----	28	EX WINDOW HTR	100	2	20	EX	EX	EX	EX	EX	H	1.5	
			29	----------	----	----	----	----	--	----	----	----	30	----------	----	----	----	----	--	----	----	----			
L	0.3		31	EX REAR STAIRWELL LTG	100	1	20	EX	EX	EX	EX	EX	32	EX WINDOW HTR	100	2	20	EX	EX	EX	EX	EX	H	1.5	
R	0.2		33	EX ATM	100	1	20	EX	EX	EX	EX	EX	34	----------	----	----	----	----	--	----	----	----			
R	1.2		35	**BASEMENT RECEPTS**	100	1	20	**1**	**2**	**12**	**12**	**3/4"**	36	EX WATER HTR	100	2	30	EX	EX	EX	EX	EX	X	4.5	
R	1.0		37	**BASEMENT RECEPTS**	100	1	20	**1**	**2**	**12**	**12**	**3/4"**	38	----------	----	----	----	----	--	----	----	----			
R	1.2		39	EX FRONT SIGN	100	1	20	EX	EX	EX	EX	EX	40	EX DRIVE TUBE	100	1	20	EX	EX	EX	EX	EX	O	0.4	
L	0.5		41	EX DRIVE THRU	100	1	20	EX	EX	EX	EX	EX	42	**MOTOR OPERATED DAMPER**	100	1	**20**	**1**	**2**	**12**	**12**	**3/4"**	O	0.2	

NOTES:
- BOLD INDICATES NEW WORK

CKT QTY		DEMAND	NON/ CONT	PNL KVA	SUBPNL KVA	DEMAND KVA	TOTAL KVA
5	Lighting [L]	1	C	2.8		2.8	3.5
34	Receptacles [R] *	0.5	N	24.0		17.0	17.0
	Motors [M]	1	<M/H>				
	Motors (alternate) [M2]	1	<M/H>				
	Multimotor/Combination [MM]	1	<M/H>				
	Heating [H] **	1	<M/H>				
	Air Conditioning [A] **	1	<M/H>			**	**
	Other (appliances, etc.) [O]	1	N				
	Auxiliary [X]	1	C				
____	Kitchen [K]	0.65	N				

PANEL CONNECTED LOAD	26.8 KVA	@ 100 AMPS
PANEL DEMAND LOAD	19.8 KVA	36.0 CB MAX KVA
TOTAL PANEL LOAD	20.5 KVA 56.9 AMPS	
SPARE CAPACITY =	15.5 KVA	
(BASED ON CB)	43.1 AMPS 43.1 %	

FOR CONT. LOADS (C), TOTAL KVA=DEMAND KVA*1.25; FOR NONCONT. (N) & MOTOR/HEATING <M/H> LOADS, TOTAL KVA=DEMAND KVA
* IF RECEPTACLE LOAD IS >10KVA, RECEPTACLE DEMAND LOAD IS (CONNECTED LOAD - 10KVA) * .5 + 10KVA
** INDICATES GREATER OF HEATING OR COOLING. GREATEST SEASONAL LOAD SAME

EXISTING
SURFACE MOUNTED PANEL S 120/208 VOLT 3 PHASE 4 WIRE 100 AMP BUS MAIN LUGS ONLY 10,000 A.I.C.

TYPE	KVA	HP	CKT NO.	FOR	BRANCH BREAKERS FRAME	P	TRIP	# SETS	WIRING #	SIZE	GND	COND.	CKT NO.	FOR	BRANCH BREAKERS FRAME	P	TRIP	# SETS	WIRING #	SIZE	GND	COND.	TYPE	KVA	HP
L	0.6		1	**LIGHTS**	100	1	20	**1**	**2**	**12**	**12**	**3/4"**	2	**REFRIG (GFI)**	100	1	**20**	**1**	**2**	**12**	**12**	**3/4"**	R	0.5	
L	0.7		3	**LIGHTS**	100	1	20	**1**	**2**	**12**	**12**	**3/4"**	4	**POWER POLE**	100	1	20	**1**	**2**	**12**	**12**	**3/4"**	R	1.2	
L	0.4		5	**LIGHTS**	100	1	20	**1**	**2**	**12**	**12**	**3/4"**	6	**POWER POLE CONTROL**	100	1	20	**1**	**2**	**12**	**12**	**3/4"**	R	0.8	
L	0.6		7	**LIGHTS**	100	1	20	**1**	**2**	**12**	**12**	**3/4"**	8	EX RECEPT	100	1	20	EX	EX	EX	EX	EX	R	0.8	
R	0.5		9	**MICROWAVE**	100	1	20	**1**	**2**	**12**	**12**	**3/4"**	10	EX RECEPT	100	1	20	EX	EX	EX	EX	EX	R	0.8	
R	0.6		11	**BREAK RM RECEPTS**	100	1	20	**1**	**2**	**12**	**12**	**3/4"**	12	SPARE	100	1	20	----	--	----	----	----			
R	0.6		13	EX WIRE MOL RECEPT	100	1	20	EX	EX	EX	EX	EX	14	SPARE	100	1	20	----	--	----	----	----			
R	0.6		15	EX WIRE MOL RECEPT	100	1	20	EX	EX	EX	EX	EX	16	EX HALL RECEPT	100	1	20	EX	EX	EX	EX	EX	R	0.8	
R	0.6		17	EX OCTAGON RECEPT	100	1	20	EX	EX	EX	EX	EX	18	EX RECEPT	100	1	20	EX	EX	EX	EX	EX	R	0.6	
R	0.6		19	EX RECEPT	100	1	20	EX	EX	EX	EX	EX	20	EX RECEPT	100	1	20	EX	EX	EX	EX	EX	R	0.6	
R	0.6		21	**RECEPTS: PRINT**	100	1	20	**1**	**2**	**12**	**12**	**3/4"**	22	EX RECEPT	100	1	20	EX	EX	EX	EX	EX	R	0.6	
R	0.8		23	EX ROOF RECEPT	100	1	20	EX	EX	EX	EX	EX	24	EX RECEPT	100	1	20	EX	EX	EX	EX	EX	R	0.6	
R	1.2		25	**SYSTEM FURN**	100	1	20	**1**	**2**	**12**	**12**	**3/4"**	26	EX RECEPT	100	1	20	EX	EX	EX	EX	EX	R	0.6	
R	0.8		27	**SYSTEM FURN CONTROL**	100	1	20	**1**	**2**	**12**	**12**	**3/4"**	28	EX RECEPT	100	1	20	EX	EX	EX	EX	EX	R	0.6	
R	1.2		29	**SYSTEM FURN**	100	1	20	**1**	**2**	**12**	**12**	**3/4"**	30	EX RECEPT	100	1	20	EX	EX	EX	EX	EX	R	0.6	
R	0.8		31	**SYSTEM FURN CONTROL**	100	1	20	**1**	**2**	**12**	**12**	**3/4"**	32	EX RECEPT	100	1	20	EX	EX	EX	EX	EX	R	0.6	
R	0.6		33	EX RECEPT	100	1	20	EX	EX	EX	EX	EX	34	EX RECEPT	100	1	20	EX	EX	EX	EX	EX	R	0.6	
R	0.6		35	EX RECEPT	100	1	20	EX	EX	EX	EX	EX	36	EX RECEPT	100	1	20	EX	EX	EX	EX	EX	R	0.6	
R	0.6		37	EX RECEPT	100	1	20	EX	EX	EX	EX	EX	38	EX CHANDILIER	100	1	20	EX	EX	EX	EX	EX	L	0.5	
R	0.8		39	EX RECEPT	100	1	20	EX	EX	EX	EX	EX	40	**SPARE**	100	1	20	----	--	----	----	----			
R	1.2		41	**RECEPTS: OFFICE**	100	1	**20**	**1**	**2**	**12**	**12**	**3/4"**	42	EX RECEPT	100	1	20	EX	EX	EX	EX	EX	R	0.4	

NOTES:
- BOLD INDICATES NEW WORK
- (GFI) INDICATES BREAKER TO BE GFI TYPE

CKT QTY		DEMAND	NON/ CONT	PNL KVA	SUBPNL KVA	DEMAND KVA	TOTAL KVA
	Lighting [L]	1	C				
35	Receptacles [R] *	0.5	N	29.0		19.5	19.5
	Motors [M]	1	<M/H>				
	Motors (alternate) [M2]	1	<M/H>				
	Multimotor/Combination [MM]	1	<M/H>				
	Heating [H] **	1	<M/H>			**	**
1	Air Conditioning [A] **	1	<M/H>	2.1		2.1	2.1
4	Other (appliances, etc.) [O]	1	N	0.5		0.5	0.5
	Auxiliary [X]	1	C				
____	Kitchen [K]	0.65	N				

PANEL CONNECTED LOAD	31.6 KVA	@ 100 AMPS
PANEL DEMAND LOAD	22.1 KVA	36.0 CB MAX KVA
TOTAL PANEL LOAD	22.1 KVA 61.3 AMPS	
SPARE CAPACITY =	13.9 KVA	
(BASED ON CB)	38.7 AMPS 38.7 %	

FOR CONT. LOADS (C), TOTAL KVA=DEMAND KVA*1.25; FOR NONCONT. (N) & MOTOR/HEATING <M/H> LOADS, TOTAL KVA=DEMAND KVA
* IF RECEPTACLE LOAD IS >10KVA, RECEPTACLE DEMAND LOAD IS (CONNECTED LOAD - 10KVA) * .5 + 10KVA
** INDICATES GREATER OF HEATING OR COOLING. GREATEST SEASONAL LOAD SAME

EXISTING
FLUSH MOUNTED PANEL C 120/208 VOLT 3 PHASE 4 WIRE 100 AMP BUS 100 AMP MAIN BREAKER 10,000 A.I.C.

TYPE	KVA	HP	CKT NO.	FOR	BRANCH BREAKERS FRAME	P	TRIP	# SETS	WIRING #	SIZE	GND	COND.	CKT NO.	FOR	BRANCH BREAKERS FRAME	P	TRIP	# SETS	WIRING #	SIZE	GND	COND.	TYPE	KVA	HP
R	4.5		1	**IT RECEPT**	100	**2**	**30**	**1**	**2**	**10**	**10**	**3/4"**	2	**HP-2 (BACKUP UNIT)**	100	**2**	**20**	**1**	**2**	**12**	**12**	**3/4"**			
			3	----------	----	----	----	----	--	----	----	----	4	----------	----	----	----	----	--	----	----	----			
R	2.5		5	EX IT RECEPT	100	1	30	EX	EX	EX	EX	EX	6	EX RTU	100	2	30	EX	EX	EX	EX	EX	A	2.1	
O	0.1		7	EX SURGE SUPPRESSOR	100	3	20	EX	EX	EX	EX	EX	8	----------	----	----	----	----	--	----	----	----			
			9	----------	----	----	----	----	--	----	----	----	10	EX 1ST FLR WIREMOLD	100	1	20	EX	EX	EX	EX	EX	R	0.6	
			11	----------	----	----	----	----	--	----	----	----	12	EX RECEPTS	100	1	20	EX	EX	EX	EX	EX	R	0.6	
R	2.5		13	EX 30A RECEPT	100	1	30	EX	EX	EX	EX	EX	14	EX RECEPTS	100	1	20	EX	EX	EX	EX	EX	R	0.6	
R	0.6		15	EX RECEPT	100	1	20	EX	EX	EX	EX	EX	16	EX CONDENSATE PUMP	100	1	20	EX	EX	EX	EX	EX	O	0.2	
R	0.6		17	EX RECEPT	100	1	20	EX	EX	EX	EX	EX	18	EX RECEPTS	100	1	20	EX	EX	EX	EX	EX	R	0.8	
R	0.6		19	EX RECEPT	100	1	20	EX	EX	EX	EX	EX	20	EX RECEPTS	100	1	20	EX	EX	EX	EX	EX	R	0.6	
R	0.6		21	EX RECEPT	100	1	20	EX	EX	EX	EX	EX	22	EX RECEPTS	100	1	20	EX	EX	EX	EX	EX	R	0.6	
R	0.6		23	EX RECEPT	100	1	20	EX	EX	EX	EX	EX	24	EX RECEPTS	100	1	20	EX	EX	EX	EX	EX	R	0.6	
R	0.6		25	EX DRIVE THRU WINDOW	100	1	20	EX	EX	EX	EX	EX	26	EX RECEPTS	100	1	20	EX	EX	EX	EX	EX	R	0.6	
R	0.6		27	EX DRIVE THRU WINDOW	100	1	20	EX	EX	EX	EX	EX	28	EX RECEPTS	100	1	20	EX	EX	EX	EX	EX	R	0.6	
R	0.6		29	EX 1ST FLR WIREMOLD	100	1	20	EX	EX	EX	EX	EX	30	EX RECEPTS	100	1	20	EX	EX	EX	EX	EX	R	0.6	
R	0.6		31	EX RECEPTS	100	1	20	EX	EX	EX	EX	EX	32	EX RECEPTS	100	1	20	EX	EX	EX	EX	EX	R	0.6	
R	0.6		33	EX RECEPTS	100	1	20	EX	EX	EX	EX	EX	34	EX RECEPTS	100	1	20	EX	EX	EX	EX	EX	R	0.6	
R	0.6		35	EX RECEPTS	100	1	20	EX	EX	EX	EX	EX	36	EX DRIVE THRU WINDOW	100	1	20	EX	EX	EX	EX	EX	R	0.6	
R	0.6		37	EX RECEPTS	100	1	20	EX	EX	EX	EX	EX	38	EX RECEPTS	100	1	20	EX	EX	EX	EX	EX	R	0.6	
R	0.6		39	EX RECEPTS	100	1	20	EX	EX	EX	EX	EX	40	EX COPIER	100	1	20	EX	EX	EX	EX	EX	R	0.5	
R	0.6		41	EX RECEPTS	100	1	20	EX	EX	EX	EX	EX	42	EX SMOKE DAMPERS	100	1	20	EX	EX	EX	EX	EX	O	0.1	
R	0.6		43	EX RECEPTS	100	1	20	EX	EX	EX	EX	EX	44	EX RECEPTS	100	1	20	EX	EX	EX	EX	EX	R	0.8	
R	0.6		45	EX RECEPTS	100	1	20	EX	EX	EX	EX	EX	46	EX FIRE ALARM PANEL	100	1	20	EX	EX	EX	EX	EX	O	0.1	
			47	**AHU-2(BACKUP UNIT)**	100	**2**	**15**	**1**	**2**	**12**	**12**	**3/4"**	48	MAIN	100	3	100	EX	EX	EX	EX	EX			
			49	----------	----	----	----	----	--	----	----	----	50	----------	----	----	----	----	--	----	----	----			
			51	SPARE	100	1	20	----	--	----	----	----	52	----------	----	----	----	----	--	----	----	----			
			53	SPARE	100	1	20	----	--	----	----	----	54	SHUNT TRIP	100	1	----	----	--	----	----	----			

NOTES:
- BOLD INDICATES NEW WORK

DRAWING NOTES

1. EXISTING INCOMING SERVICE FROM UTILITY COMPANY TO REMAIN.
2. EXISTING PANEL TO REMAIN, REFER TO SCHEDULE THIS SHEET.
3. EXISTING PANEL TO REMAIN, (NO NEW WORK IN THIS PANEL).

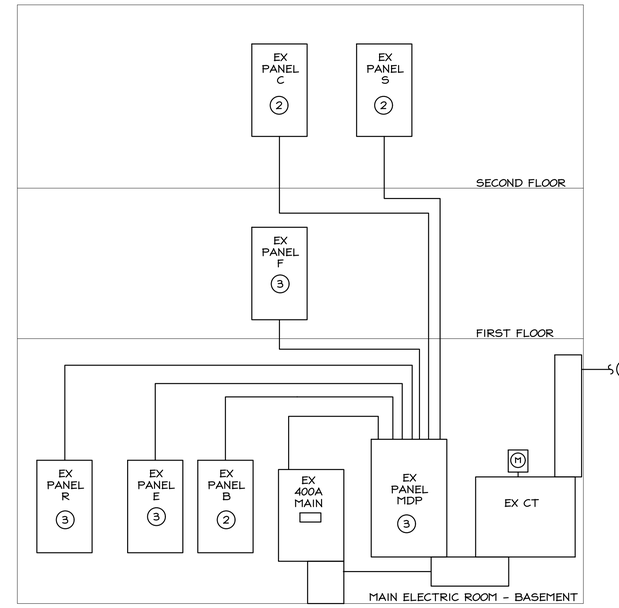

EXISTING POWER RISER DIAGRAM

NO SCALE

FARMERS & MERCHANTS BANK
25 WESTMINSTER PIKE
REISTERTOWN, MARYLAND, 21136
INTERIOR ALTERATION

I CERTIFY THAT THESE DOCUMENTS WERE PREPARED OR APPROVED BY ME AND THAT I AM A DULY LICENSED PROFESSIONAL ENGINEER UNDER THE LAWS OF THE STATE OF MARYLAND.

LICENSE NO.: 19994

EXP. DATE: 3/31/2027

THESE DRAWINGS ARE NOT PERMITTED TO BE COPIED OR REPRODUCED, EITHER WHOLLY OR PARTIALLY, UNLESS WRITTEN PERMISSION IS FIRST OBTAINED FROM SANDERS DESIGNS, P.A.

MECHANICAL & ELECTRICAL DESIGN CONSULTANTS, INC.
1901 N. Fountain Green Road
Bel Air, Maryland 21015-1411
410-893-2822 • Fax 410-803-0442
web site: www.jlrdesign.net

SANDERS | DESIGNS
ARCHITECTS PLANNERS
WWW.SANDERSDESIGNS.COM
MAILBOX@SANDERSDESIGNS.COM
9727 GREENSIDE DRIVE, SUITE 202, COCKEYSVILLE, MARYLAND 21030 T: (410) 560 2624

No.	Date	Revision

Project No.:
Date:
Scale:
Edition:
PERMIT SET
Drawing Name:
RISER DIAGRAM & PANEL SCHEDULES
Drawing Number:
E-6

1. SECTION 16010 - BASIC ELECTRICAL REQUIREMENTS

A. THE WORK OF EACH OF THE ELECTRICAL SECTIONS INCLUDES FURNISHING AND INSTALLING THE MATERIAL, EQUIPMENT AND SYSTEMS COMPLETE AS SPECIFIED AND/OR INDICATED ON THE DRAWINGS. THE ELECTRICAL INSTALLATIONS, WHEN FINISHED, SHALL BE COMPLETE AND COORDINATED, READY FOR SATISFACTORY SERVICE.

B. THE WORK UNDER THIS CONTRACT SHALL BE DONE IN STRICT ACCORDANCE WITH ALL APPLICABLE MUNICIPAL, STATE, AND OTHER LOCAL CODES, THE 2017 EDITION OF THE NATIONAL ELECTRICAL CODE AND THE 2010 AMERICANS WITH DISABILITIES ACT.

C. MAKE APPLICATION AND PAY FOR ALL PERMITS, LICENSES AND INSPECTIONS AS REQUIRED UNDER THE ABOVE CODES.

D. THE GENERAL ARRANGEMENT OF CONDUIT, WIRING AND EQUIPMENT SHALL BE AS IDENTIFIED ON THE CONTRACT DRAWINGS. THE CONTRACTOR SHALL CAREFULLY INVESTIGATE THE SITE, STRUCTURAL, AND FINISH CONDITIONS AFFECTING HIS WORK AND SHALL ARRANGE SUCH WORK ACCORDINGLY, PROVIDING SUCH FITTINGS AND ACCESSORIES AS MAY BE REQUIRED TO MEET SUCH CONDITIONS.

E. PROVIDE ALL LABOR, MATERIALS, TOOLS, EQUIPMENT AND SERVICES NECESSARY FOR AND REASONABLY INCIDENTAL TO THE COMPLETE INSTALLATION OF THE ELECTRICAL WORK AND RELATED SYSTEMS AS INDICATED ON THE DRAWINGS OR AS NECESSARY TO PROVIDE A COMPLETE SYSTEM.

F. PROVIDE ALL NECESSARY TEMPORARY WIRING, LIGHTING AND CONSTRUCTION POWER FOR ALL TRADES AS REQUIRED TO COMPLETE THE PROJECT.

G. ALL MATERIALS AND EQUIPMENT SHALL BE INSTALLED AND COMPLETED IN A FIRST CLASS WORKMANLIKE MANNER. ALL MATERIALS SHALL BE NEW AND THE BEST OF THEIR RESPECTIVE KINDS. ALL EQUIPMENT AND SYSTEMS SHALL BE APPROVED BY UL OR SIMILAR NATIONALLY ACCEPTED TESTING AGENCY SUCH AS ETL TESTING LABORATORIES.

H. SUBMIT DETAILED DIMENSIONED SHOP DRAWINGS, TOGETHER WITH WIRING DIAGRAMS, SPECIFICATIONS, OPERATING DATA AND/OR CATALOG CUTS FOR ALL EQUIPMENT.

I. A THOROUGH TEST SHALL BE MADE PRIOR TO ENERGIZING THE SYSTEM TO DEMONSTRATE THAT THE SYSTEM IS ENTIRELY FREE FROM GROUND FAULTS, SHORT CIRCUITS, AND OPEN CIRCUITS; THAT THE RESISTANCE TO GROUND ALL NON-GROUNDED CIRCUITS, BEFORE AND AFTER CONNECTION OF EQUIPMENT, MEETS THE REQUIREMENTS OF THE NATIONAL ELECTRICAL CODE AND IEEE STANDARDS/RECOMMENDATIONS.

J. PROVIDE IDENTIFICATION PLATES FOR ALL MOTOR STARTERS, DISCONNECT SWITCHES, CONTROLS, PANELBOARDS, SWITCHBOARDS, TERMINAL BOARDS, CONTROL CENTERS AND OTHER SUCH EQUIPMENT. IDENTIFICATION PLATES SHALL BE LAMINATED BLACK PLASTIC WITH 3/8" HIGH WHITE ENGRAVED LETTERS.

K. THE MATERIAL AND WORKMANSHIP OF ALL PARTS OF THE ELECTRICAL INSTALLATION SPECIFIED HEREIN SHALL BE GUARANTEED UNCONDITIONALLY FOR A PERIOD OF ONE (1) YEAR FROM DATE OF ACCEPTANCE.

L. UPON COMPLETION OF THE ELECTRICAL INSTALLATION, DELIVER TO THE OWNER ONE (1) SET OF PRINTS OF ELECTRICAL CONTRACT DRAWINGS WHICH SHALL BE LEGIBLY MARKED IN RED PENCIL TO SHOW ALL ADDITIONS, CHANGES AND DEPARTURES OF THE INSTALLATION AS COMPARED WITH THE ORIGINAL DESIGN. THEY SHALL BE SUITABLE FOR USE IN PREPARATION OF RECORD DRAWINGS.

M. PREPARE THREE (3) COPIES OF A RECORD AND INFORMATION MANUAL. THE MANUAL SHALL BE BOUND IN A THREE-RING LOOSE-LEAF BINDER. PROVIDE THE FOLLOWING DATA IN THE BOOKLET:

- M.1. CUTS OF ALL EQUIPMENT WITH TECHNICAL SPECIFICATIONS.
- M.2. OPERATION AND MAINTENANCE PROCEDURES.
- M.3. SERVICING INSTRUCTIONS.
- M.4. COPIES OF PANELBOARD DIRECTORIES.
- M.5. COPIES OF WARRANTIES.
- M.6. LIST OF LAMPS SHOWING QUANTITY, TYPE, WATTAGE, MANUFACTURER, CATALOG NUMBER, ETC., FOR EACH FIXTURE TYPE.
- M.7. COPIES OF TEST REPORTS.

N. EXACT LOCATIONS OF OUTLETS SHALL BE COORDINATED WITH DOOR SWINGS AND VARIOUS PROTRUSIONS. MOUNTING HEIGHTS OF THE VARIOUS ELECTRICAL DEVICES SHALL BE AS FOLLOWS:

- N.1. SWITCHES & PULL STATIONS - 46"AFF TO CENTER OF BOX.
- N.2. RECEPTACLES - 20"AFF TO CENTER OF BOX.
- N.3. COMMUNICATIONS OUTLETS - 20"AFF TO CENTER OF BOX.
- N.4. EXIT LIGHTS - CENTERED BETWEEN CEILING AND TOP OF DOOR (UP TO 1'-0" ABOVE DOOR), SURFACE OR CEILING MOUNTED AS INDICATED.
- N.5. DISCONNECTING SWITCHES - 52"AFF TO CENTER OF SWITCH.
- N.6. FIRE ALARM BELLS/HORNS/FLASHING LIGHTS - 80"AFF TO TOP OF DEVICE OR 6" BELOW CEILING TO TOP OF DEVICE, WHICHEVER IS LOWER.

O. PROVIDE A DISCONNECT FOR EACH MOTOR AS SHOWN ON THE DRAWINGS SIZED AS REQUIRED TO MEET THE NEC AND PROVIDE ALL WIRING CONNECTIONS FROM SOURCE. PROVIDE REQUIRED VOLTAGE.

P. SEAL ALL CONDUIT PENETRATIONS THRU RATED WALLS AND FLOORS TO MAINTAIN FIRE INTEGRITY. REFER TO ARCHITECTURAL DRAWINGS FOR FIRE WALL LOCATIONS.

Q. VERIFY ALL LOCATIONS, VOLTAGES AND AMPERES OF MECHANICAL EQUIPMENT WITH MECHANICAL CONTRACTOR PRIOR TO ROUGH-IN.

2. SECTION 16050 - BASIC ELECTRICAL MATERIALS AND METHODS

A. INSTALL ALL WIRING IN CONDUIT EXCEPT AS OTHERWISE INDICATED BELOW. MINIMUM CONDUIT SIZE SHALL BE 3/4". ALL CONDUIT EMBEDDED IN CONCRETE SHALL BE 1" MINIMUM. INSTALL ALL CONDUIT CONCEALED UNLESS ON UNFINISHED WALLS, ON UNFURRED CEILINGS OR MECHANICAL EQUIPMENT SPACES. PROVIDE CONDUIT AS FOLLOWS:

- A.1. RIGID STEEL CONDUIT FOR WORK EXPOSED TO WEATHER.
- A.2. GALVANIZED ELECTRICAL METALLIC TUBING (EMT) FOR INTERIOR EXPOSED WORK.
- A.3. FLEXIBLE METAL CONDUIT IN SHORT LENGTHS (6' MAXIMUM DISTANCE BETWEEN SUPPORTS) FOR THE CONNECTION OF RECESSED LIGHTING FIXTURES AND MOTORS.
- A.4. LIQUID TIGHT FLEXIBLE METAL CONDUIT WHEREVER MOISTURE MAY BE PRESENT AND MOTORS IN MECHANICAL EQUIPMENT SPACES.
- A.5. POLYVINYLCHLORIDE (PVC) SCHEDULE 40 CONDUIT WITH GROUND CONDUCTOR FOR UNDERGROUND OUTSIDE OF BUILDING (SITE) AND EMBEDDED IN CONCRETE FLOOR INSTALLATION.

B. INSTALL CONDUITS PARALLEL AND PERPENDICULAR TO WALLS AND INTERIOR SURFACES. CLEAN AND PLUG AND PROVIDE A PULL LINE IN EACH CONDUIT TO BE LEFT EMPTY. USE MANUFACTURED ELBOWS AND SCREW JOINT CONDUIT FITTINGS. USE CAPPED BUSHINGS OR "PUSH PENNY" PLUGS.

C. ALL OUTLET, SWITCH AND JUNCTION BOXES SHALL BE SHERARDIZED OR GALVANIZED STAMPED STEEL BY STEEL CITY, RACO, APPLETON, VALEN, OR EQUIVALENT. OUTLET BOXES IN CONCRETE CONSTRUCTION SHALL BE OCTAGONAL. NO "THRU-WALL" BOXES SHALL BE USED IN PARTITIONS. ALL BOXES SHALL BE FURNISHED WITH APPROPRIATE COVERS.

D. JUNCTION AND PULL BOXES SHALL BE FURNISHED AND INSTALLED AS INDICATED OR WHERE REQUIRED TO FACILITATE PULLING OF WIRES OR CABLES. BOXES FOR EXTERIOR WORK SHALL BE CAST ALUMINUM OR GALVANIZED CAST IRON TYPE WITH THREADED HUBS, UNLESS OTHERWISE DIRECTED. GASKETED COVER PLATES SHALL BE FURNISHED FOR OUTDOOR INSTALLATIONS.

E. BUILDING WIRE, UNLESS OTHERWISE INDICATED, SHALL BE COPPER, 600 VOLT, TYPE THWN/THHN INSULATION, #12 AWG MINIMUM. FOR BRANCH CIRCUITS TYPE MC (METAL CLAD) CABLE MAY BE USED WHERE PERMITTED BY THE NEC AND LOCAL CODES. NO ROMEX OR AC (BX) CABLE WILL BE ALLOWED ON THE PROJECT.

F. MINIMUM WIRE SIZE SHALL BE NUMBER TWELVE (12) AWG. NO SPLICES SHALL BE MADE EXCEPT WITHIN OUTLET OR JUNCTION BOXES. WIRES NUMBER EIGHT (8) AWG AND LARGER SHALL BE STRANDED. WIRES AND CABLES SHALL BE AS MANUFACTURED BY PIRELLI, ROYAL, TRIANGLE OR EQUIVALENT.

G. THE COLOR CODING SYSTEM LISTED BELOW SHALL BE USED THROUGHOUT THE BUILDING:

SYSTEM	PHASE A	PHASE B	PHASE C	NEUTRAL	GROUND
120/208V	BLACK	RED	BLUE	WHITE	GREEN

H. THE WIRE SIZE INDICATED IN THE HOMERUN SHALL BE USED THROUGHOUT THE CIRCUIT.

I. PROVIDE DISCONNECT SWITCHES WHERE INDICATED AND AS REQUIRED. SWITCHES SHALL BE OF SIZE, NUMBER OF POLES AND FUSED OR NONFUSED, AS REQUIRED FOR JOB CONDITIONS AND THE NATIONAL ELECTRICAL CODE. ALL SAFETY SWITCHES SHALL BE NEMA 1 ENCLOSURE TYPE "HD" WITH INTERLOCKING COVER AND HANDLE, MANUFACTURED BY SQUARE "D" OR APPROVED EQUAL. PROVIDE NEMA 3R ENCLOSURES WHERE REQUIRED.

J. PROVIDE STARTERS AND CONTROL WIRING AS INDICATED ON THE DRAWINGS, OR SPECIFIED HEREIN. ALL TEMPERATURE CONTROL WIRING AND COMPONENTS SHALL BE UNDER DIVISION 15.

K. PROVIDE THERMAL MANUAL MOTOR STARTING SWITCHES FOR FRACTIONAL HORSEPOWER, SINGLE PHASE MOTORS. THE STARTERS SHALL BE SQUARE D COMPANY, CLASS 2510, ALLEN BRADLEY BULLETIN 600 OR APPROVED EQUAL FOR SINGLE SPEED MOTORS. ENCLOSURES SHALL BE NEMA 1 FOR INTERIOR USE AND NEMA 3R FOR EXTERIOR USE.

L. THREE PHASE MOTOR STARTERS SHALL BE 3 POLE, FULL-VOLTAGE, MAGNETIC TYPE. ENCLOSURES SHALL BE NEMA 1 FOR INTERIOR USE AND NEMA 3R FOR EXTERIOR USE. PROVIDE HOA SWITCH WHEN AUTOMATICALLY CONTROLLED, PILOT INDICATING LIGHT, CONTROL TRANSFORMER, AND NO/NC AUXILIARY CONTACTS. STARTERS SHALL BE SQUARE D COMPANY, CLASS 8536 AND CLASS 8538 COMBINATION TYPE OR APPROVED EQUAL.

M. WIRING DEVICES SHALL BE EQUAL TO THE FOLLOWING MANUFACTURER'S NUMBER:

COORDINATE COLORS AND FINISHES WITH ARCHITECT

- M.1. WALL SWITCHES: 120/277V AC. SINGLE POLE, THREE-WAY AND FOUR-WAY SWITCHES SHALL BE OF THE SAME MANUFACTURER AND GRADE. LEVITON CSB1-20W.
- M.2. WALL ROTARY SWITCH FOR CEILING FAN SPEED CONTROL: SINGLE POLE 120 VOLT AC WITH 5 AMPERE LOAD RATING. LEVITON 6616-1XW.
- M.3. RECEPTACLES: 20 AMPERES, 120 VOLTS. LEVITON BR20W.
- M.4. GFCI RECEPTACLE: 20 AMPERES, 120 VOLTS. LEVITON 6899W.
- M.5. TAMPER RESISTANT RECEPTACLE: 20 AMPERES, 125 VOLTS. LEVITON 5362-SGW.
- M.6. TAMPER RESISTANT GFCI TYPE RECEPTACLE: 20 AMPERES, 125 VOLTS. LEVITON GFTR2-KW.
- M.7. OCCUPANCY SENSOR CEILING CORNER/WALL MOUNT FOR CORRIDORS: LOW VOLTAGE DUAL TECH. LEVITON OSW SERIES COMPLETE WITH ASSOCIATED 24V OSP SERIES POWER PACK.
- M.8. OCCUPANCY SENSOR CEILING MOUNT: DUAL TECHNOLOGY TYPE LEVITON OSC05-RMW.
- M.9. LINE VOLTAGE WALL VACANCY SENSOR SWITCH: LEVITON ODS15.
- M.10. 0-10V DIMMER WITH SINGLE MOMENTARY CONTACT SWITCH FOR ON/OFF CONTROL BOTH SINGLE AND 3-WAY OPERATION: LEVITON IP710-LFZ.
- M.11. LOW VOLTAGE MOMENTARY CONTACT SWITCH WITH ON/OFF LIGHTING CONTROL: LEVITON 56081-2W.
- M.12. 1000SF/2000SF MULTI-TECHNOLOGY CEILING OCCUPANCY/VACANCY SENSOR: LEVITON OSC10-MOW/OSC20-MOW.
- M.13. LIGHTING CONTROL POWER PACK FOR OCCUPANCY AND VACANCY SENSOR MODES: LEVITON OPP20-D2.
- M.14. AUXILIARY POWER LIGHTING RELAY FOR CONTROLLED LIGHTING FIXTURES ON BOTH NORMAL AND EMERGENCY POWER. RELAY PROVIDES AUTOMATIC SWITCHOVER TO EMERGENCY CIRCUIT FROM NORMAL POWER UPON NORMAL POWER FAILURE WHILE ALLOWING FIXTURE TO BE FULLY SWITCHED WITH AREA CONTROLS. BODINE GTD20A OR EQUAL. UNIVERSAL INPUT VOLTAGE RANGE 120-277, UL 10008.
- M.15. TIMECLOCK: 120/277V ASTRONOMICAL TYPE WITH 4 INDEPENDENT CHANNELS/CIRCUITS, ON/OFF BUTTONS WITH 2 HOUR OVERRIDE CONTROL AND 100 HOUR SUPERCAPACITOR. INTERMATIC ET2100 SERIES.
- M.16. TIMER SWITCH FOR REMOTE MANUAL OVER-RIDE OF TIMECLOCK: 2 HOUR MAXIMUM IN 15 MINUTE INCREMENTS. PROVIDE WITH WHITE COVERPLATE. LEVITON LTB02-1L (120V).
- M.17. DEVICE PLATES: LEVITON COMMERCIAL GRADE NYLON, WHITE WALLPLATES.

N. MOUNT WEATHERPROOF DEVICES IN CAST METAL BOXES WITH GASKETED, SPRING HINGED LID-TYPE LOCKING COVERS HAVING CORROSION RESISTANT FINISH.

O. PROVIDE EQUIPMENT GROUNDING CONDUCTORS IN ALL BRANCH CIRCUITS AND FEEDERS SIZED IN ACCORDANCE WITH THE NEC.

P. ALL BRANCH CIRCUITS SHALL BE RUN CONCEALED IN EXISTING AND NEW WALLS. CUT AND PATCH EXISTING WALLS AND SURFACES AS REQUIRED.

Q. ALL D.C. WIRING SHALL BE #10 AWG MINIMUM.

R. GROUND, PHASE AND NEUTRAL CONDUCTORS SHALL BE PIG-TAILED IN OUTLET BOXES OR MULTI-OUTLET ASSEMBLY FOR RECEPTACLES SO THAT GROUND AND ELECTRICAL SERVICE WILL NOT BE DISTURBED BY OTHER RECEPTACLES ON THE SAME MULTI-WIRE CIRCUIT IF A RECEPTACLE IS REMOVED.

3. SECTION 16400 - SERVICE AND DISTRIBUTION

A. ELECTRICAL SERVICE IS EXISTING.

B. PANELBOARDS SHALL BE 120/208 VOLTS, THREE PHASE, EMPLOYING BREAKERS WITH A MINIMUM 10,000 SYMMETRICAL A.I.C. AT 120 VOLTS OR 240 VOLTS. FURNISH PANELBOARDS AS FOLLOWS:

	MANUFACTURER	120/208V
B.1.	SQUARE D	NQOD
B.2.	GENERAL ELECTRIC	AQ
B.3.	CUTLER-HAMMER	POW-R-LINE 1

C. PANELBOARDS SHALL BE FACTORY ASSEMBLED WITH BOLT-ON TYPE CIRCUIT BREAKERS. BUS MAY BE COPPER OR ALUMINUM. PANELS 600 AMPS OR LARGER SHALL BE SQUARE-D I-LINE TYPE OR EQUAL UNLESS OTHERWISE INDICATED. PROVIDE 50% GROUND BUS BAR. PANELS CONNECTED TO K-RATED TRANSFORMERS SHALL HAVE 200% RATED NEUTRAL BUS BARS.

D. CIRCUIT NUMBERS ARE FOR GUIDANCE ONLY. BALANCE LOADS AS CLOSELY AS POSSIBLE. PROVIDE THREE (3) 3/4 INCH SPARE CONDUITS FROM EACH RECESSED PANEL TO THE CEILING SPACE.

E. FUSES FOR SERVICE ENTRANCE EQUIPMENT SHALL BE U.L. LISTED CLASS L, J, OR RK1. FUSES FOR FEEDER CIRCUITS AND PANELBOARDS SHALL BE U.L CLASS RK1 FAST-ACTING TYPE. FUSES FOR MOTOR OVERCURRENT, MOTOR CONTROLLER, AND TRANSFORMER PROTECTION SHALL BE DUAL-ELEMENT, U.L. CLASS RK1 TIME-DELAY TYPE.

F. PROVIDE TYPED DIRECTORY FOR EACH PANELBOARD PER NEC ARTICLE 408.4.

4. SECTION 16500 - LIGHTING

A. PROVIDE A COMPLETE LIGHTING FIXTURE AT EACH LOCATION INDICATED ON THE DRAWINGS AND AS SPECIFIED ON THE LIGHTING FIXTURE SCHEDULE.

B. EACH FIXTURE SHALL BE COMPLETELY EQUIPPED WITH LAMPS OF THE SIZE, TYPE, WATTAGE AND SHAPE INDICATED AND SPECIFIED. ALL LAMPS SHALL BE MANUFACTURED BY THE GENERAL ELECTRIC CO., PHILIPS LIGHTING CO., VENTURE LIGHTING INTERNATIONAL OR SYLVANIA/OSRAM CORPORATION. LUMEN OUTPUT AND LIFE OF LAMPS SHALL BE EQUIVALENT TO THE GENERAL ELECTRIC LAMP OF THAT TYPE AND WATTAGE. EXACT VOLTAGE SHALL BE CHECKED BEFORE ORDERING LAMPS.

C. ALL LED FIXTURES ARE TO COMPLY WITH THE FOLLOWING STANDARDS: UL STANDARD 8750, IES STANDARD LM-79, ANSI C78.377, IES STANDARD TM-21 AND IES STANDARD LM-80. PROVIDE WITH A MINIMUM WARRANTY OF 5 YEARS WHICH INCLUDES BOTH PRODUCT REPLACEMENT AND INSTALLATION COST.

D. ALL LED LAMPS TO HAVE A COLOR TEMPERATURE OF 3500K AND A MINIMUM CRI RATING OF 80 UNLESS SPECIFICALLY NOTED OTHERWISE.

E. ALL LED DRIVERS SHALL BE ELECTRONIC TYPE AND LABELED COMPLIANT WITH FCC TITLE 47 SECTION 15 FOR RFI (RADIO FREQUENCY INTERFERENCE). DRIVERS SHALL HAVE A SOUND RATING OF "A" WITH 20% MAXIMUM THD AND AN EFFICIENCY RATING OF 85% MINIMUM. DRIVERS SHALL BE PROPERLY RATED FOR THE AMBIENT TEMPERATURES IN WHICH THEY WILL BE LOCATED.

F. DIMMABLE LED DRIVERS SHALL BE 0-10V TYPE AND ABLE TO DIM THROUGHOUT THEIR FULL RATED RANGE WITHOUT FLICKER OR STROBING.

G. ALL PLASTIC DIFFUSERS SHALL BE 100 PERCENT VIRGIN ACRYLIC (NOMINAL .125 INCH THICK) AND ALL LEXAN DIFFUSERS SHALL BE LEXAN TYPE MR-4000, OR EQUAL.

H. CONSULT THE CEILING CONTRACTOR AND ARCHITECT'S DRAWINGS FOR APPROVED REFLECTED CEILING PLANS BEFORE ORDERING FIXTURES TO INSURE THAT ALL ARE COMPATIBLE WITH THE CEILING SYSTEM AND PROPERLY LOCATED. VERIFY THAT ADEQUATE CLEARANCE FOR INSTALLATION, MAINTENANCE, AND HEAT DISSIPATION IS AVAILABLE.

I. FOR ALL RECESSED LIGHTING FIXTURES, PROVIDE A MINIMUM OF TWO (2) GALVANIZED STEEL #12 GAUGE HANGER WIRES TO BUILDING STRUCTURE (ALTERNATE CORNERS).

J. FOR ALL SUSPENDED LIGHTING FIXTURES, COORDINATE EXACT SUSPENSION LENGTH SO THAT BOTTOM OF FIXTURE IS BELOW ANY ADJACENT DUCTWORK.

K. RELOCATE OR PROVIDE ADDITIONAL EXIT LIGHTS AND EMERGENCY BATTERY PACK WITH DUAL HEADS AS NEEDED TO MEET FIRE MARSHAL'S WALK-THROUGH AND ACCEPTANCE.

L. CONNECT EXIT LIGHTS, EMERGENCY BATTERY UNITS AND NIGHT LIGHTS (NL) TO THE UNSWITCHED PORTION OF THE LIGHTING CIRCUIT SERVING THE RESPECTIVE AREA.

5. SECTION 16700 - COMMUNICATION SYSTEMS

A. TELEPHONE SERVICE IS EXISTING.

B. PROVIDE NYLON RING WITH PULLSTRING TO CEILING SPACE ABOVE FOR COMMUNICATIONS OUTLETS. CABLING AND DEVICES SHALL BE FURNISHED AND INSTALLED BY OTHERS.

Interior Lighting Compliance Certificate

Project Information

Energy Code:	2021 IECC
Project Title:	26-082 Farmers Bnak
Location:	Reisterstown, Maryland
Climate Zone:	4a
Project Type:	Alteration

Construction Site:	Owner/Agent:	Designer/Contractor:
25 Westminster Road Reisterstown , Maryland 21136		JLR 1901 N Fountain Green Rd Bel Air , 21015 4108932822 charlies@jlrdesign.net

Allowed Interior Lighting Power

A	B	C	D
Area Category	Floor Area (ft2)	Allowed Watts / ft2	Allowed Watts
1-Farmers Bank (Bank:Banking Activity Area)	6517	0.61	3975
Total Allowed Watts:			**4171**

Proposed Interior Lighting Power

A	B	C	D
Fixture ID : Description / Lamp / Wattage Per Lamp / Ballast	# of Fixture	Fixture Watt.	(B X C)
1-Farmers Bank (Bank:Banking Activity Area)			
A/AE: A/AE: LED:	61	38	2318
B/BE: B/BE: LED:	22	31	682
C: C: LED:	2	42	84
D/DE: D/DE: LED:	8	16	128
F: F: LED:	5	80	400
G: G: LED:	1	40	40
Total Proposed Watts:			**3652**

Proposed Interior Lighting Controls

Fixture	Lighting Control
1-Farmers Bank (Bank:Banking Activity Area)	
A/AE: A/AE: LED:	Occupancy Sensor, Interior Timeswitch, Manual Control
B/BE: B/BE: LED:	Occupancy Sensor, Interior Timeswitch, Manual Control
C: C: LED:	Occupancy Sensor, Interior Timeswitch, Manual Control
D/DE: D/DE: LED:	Occupancy Sensor, Interior Timeswitch, Manual Control
F: F: LED:	Occupancy Sensor, Interior Timeswitch, Manual Control
G: G: LED:	Occupancy Sensor, Interior Timeswitch, Manual Control

Interior Lighting PASSES

Interior Lighting Compliance Statement

Compliance Statement: The proposed interior lighting design represented in this document is consistent with the building plans, specifications, and other calculations submitted with this permit application. The proposed interior lighting systems have been designed to meet the 2021 IECC requirements in COMcheckWeb and to comply with any applicable mandatory requirements listed in the Inspection Checklist.

FARMERS & MERCHANTS BANK
25 WESTMINSTER PIKE
REISTERTOWN, MARYLAND, 21136
INTERIOR ALTERATION

I CERTIFY THAT THESE DOCUMENTS WERE PREPARED OR APPROVED BY ME AND THAT I AM A DULY LICENSED PROFESSIONAL ENGINEER UNDER THE LAWS OF THE STATE OF MARYLAND.

LICENSE NO.: 19994

EXP. DATE: 3/31/2027

THESE DRAWINGS ARE NOT PERMITTED TO BE COPIED OR REPRODUCED, EITHER WHOLLY OR PARTIALLY, UNLESS WRITTEN PERMISSION IS FIRST OBTAINED FROM SANDERS DESIGNS, P.A.

MECHANICAL & ELECTRICAL DESIGN CONSULTANTS, INC.
1901 N. Fountain Green Road
Bel Air, Maryland 21015-1411
410-893-2822 • Fax 410-803-0442
web site: www.jlrdesign.net

SANDERS | DESIGNS
ARCHITECTS PLANNERS
WWW.SANDERSDESIGNS.COM MAILBOX@SANDERSDESIGNS.COM
9727 GREENSIDE DRIVE, SUITE 202, COCKEYSVILLE, MARYLAND 21030 T: (410) 560 2624

No.	Date	Revision

Project No.:
Date:
Scale:
Edition:
PERMIT SET
Drawing Name: **ELECTRICAL SPECIFICATIONS & COMCHECK**
Drawing Number: E-7